PIUSI

Fluid Handling Innovation

SELF SERVICE

AGILIS
SELFSERVICE
MANAGEMENT

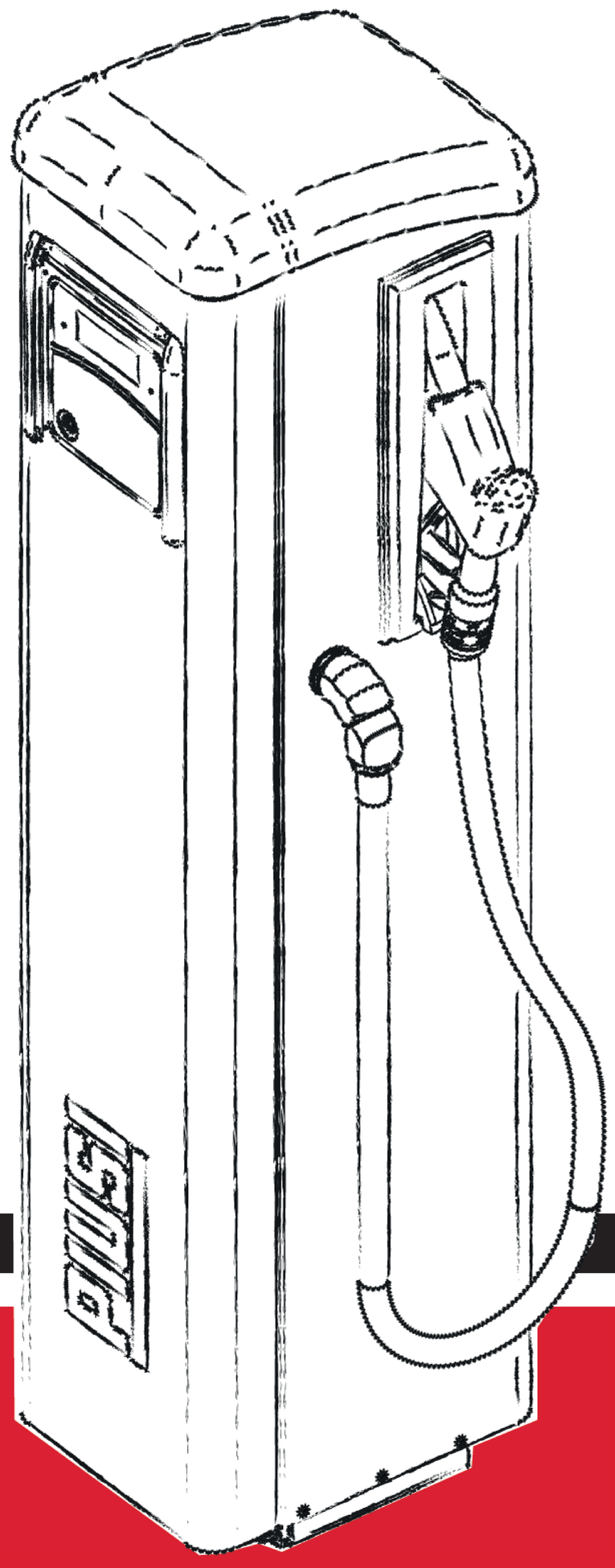

MADE IN ITALY

Installation, use and maintenance

EN

BULLETIN M0653 EN_00

ENGLISH

Bulletin M0653

EN

CONTENTS

1 EU DECLARATION OF CONFORMITY 5
1.1 FACSIMILE OF THE EU DECLARATION OF CONFORMITY 5
2 GENERAL PRECAUTIONS 6
2.1 SYMBOLS USED IN THE MANUAL 6
2.2 MANUAL STORAGE 6
2.3 RIGHTS FOR REPRODUCTION 6
3 INSTRUCTIONS AND SAFETY NORMS 7
4 FIRST AID MEASURES 10
5 TRANSPORT, HANDLING AND UNPACKING 10
6 DIMENSIONS AND WEIGHTS 11
7 PACKAGE CONTENTS/PRELIMINARY INSPECTION 12
8 MACHINE AND MANUFACTURER IDENTIFICATION 13
8.1 PLATES POSITIONS 13
9 DESCRIPTION OF MAIN PARTS 15
9.1 BODY 15
9.2 PUMPING UNIT 15
9.3 PULSER FLOW METER 16
9.4 DISPENSING NOZZLE 16
9.5 LEVEL INDICATOR 16
9.6 DISPLAY COVER 16
9.7 MANAGING SYSTEM 17
10 BRIEF OVERVIEW OF FEATURES 18
10.1 ACCESS CONTROL 18
10.2 USERS 18
10.3 CONFIGURATION 18
10.4 MANAGEMENT 18
10.5 DISPENSING 19
10.6 DATA MANAGEMENT WITH A PC (OPTIONAL) 19
10.7 PERFORMANCE 19
11 INTENDED USE 20
11.1 INTENDED USE 20
11.2 IMPROPER USE 20
12 TECHNICAL CHARACTERISTICS 21
13 INSTALLATION 23
13.1 DANGEROUS AREA 23
13.2 POSITIONING THE DISPENSER 24
13.3 DISTRIBUTOR FIXING 24
13.4 HYDRAULIC CONNECTIONS 26
13.4.1 SUCTION LINE 26
13.4.2 MAXIMUM LENGTH OF SUCTION PIPING 26
13.4.3 RECOMMENDATIONS AND WARNINGS 26
13.4.4 DELIVERY HOOK-UP DIAGRAM 26
13.5 ELECTRICAL INSTALLATION 27
13.5.1 POWER SUPPLY CABLE 29
13.5.2 MOTOR CABLE 30
13.5.3 8 POSITION SIGNAL CONNECTOR 30
13.5.4 NOZZLE CONTACT 31
13.5.5 RS485 SERIAL DATA CONNECTION 31
14 GETTING TO KNOW SELF SERVICE AGILIS 32
14.1 OPERATING MODES 32

This manual is the property of PIUSI S.p.A. Whole or partial reproduction of this manual is forbidden.

14.1.1 SYSTEM MODE 32
14.1.2 DISPENSING MODE 32
14.2 DISPLAYS 32
14.2.1 NUMERIC DISPLAY 32
14.2.2 ALPHANUMERIC DISPLAY 32
14.3 KEYPAD 33
14.4 SPECIAL KEY COMBINATIONS 33
14.5 ELECTRONIC KEYS AND THE READER 33
15 USING SELF SERVICE 34
15.1 GENERAL INFORMATION 34
15.2 REPRESENTATION OF THE SOFTWARE 34
15.3 REPRESENTATIONS OF KEY PRESSES 35
16 SOFTWARE OVERVIEW 37
16.1 BOOT 38
16.2 ACCESS CONTROL AND DISPENSING 38
16.2.1 CODE CHECK 39
16.2.2 KEY CHECK 39
16.3 LEVEL ALARM MANAGEMENT 39
16.3.1 CONFIGURATION 1 39
16.3.2 CONFIGURATION 2 39
16.3.3 CONFIGURATION 3 39
17 SYSTEM CONFIGURATION 40
17.1 INSTALLATION CONFIGURATION 40
18 SYSTEM MANAGEMENT 46
18.1 REPORT MENU 46
18.2 MENU USERS 51
18.3 SYSTEM MENU 55
18.4 CHECK KEY 57
18.5 CALIBRATION 58
18.6 DATA TRANSFER 60
18.7 DISPENSING 62
18.8 DISPENSING WITH PRESET 62
18.9 OPTIONAL INPUTS 62
18.10 DISPENSING - MESSAGE 64
19 MAINTENANCE 65
19.1 ROUTINE MAINTENANCE 65
19.2 DISPENSER MAINTENANCE 65
19.3 OPENING AND CLOSING THE SELF SERVICE 65
19.4 PUMP AND PIPES 66
19.5 PIPE AND DELIVERY NOZZLE 66
19.6 FILTER MAINTENANCE 67
19.6.1 SUCTION FILTER 68
19.6.2 PUMP FILTER (FITTED ON MODELS WITH PANTHER PUMPS ONLY) 69
19.6.3 PULSER FILTER 69
19.6.4 DELIVERY FILTER (only for SELF SERVICE MC AGILIS models) 70
19.6.5 DELIVERY FILTER (only for SELF SERVICE TANK MC AGILIS models) 71
19.7 EXTRAORDINARY MAINTENANCE 72
19.8 CHECK AND REPLACEMENT OF FUSES 72
19.9 FIRMWARE UPDATE 74
20 TROUBLESHOOTING 75
20.1 MECHANICAL AND HYDRAULIC PROBLEMS 75
20.2 ELECTRICAL/ELECTRONIC PROBLEMS 76
21 SCRAPPING AND DISPOSAL 77
22 REPLACEMENT PARTS TABLE 79

1 EU DECLARATION OF CONFORMITY

1.1 FACSIMILE OF THE EU DECLARATION OF CONFORMITY

The undersigned: PIUSI S.p.A
Via Pacinotti 16/A z.i. Rangavino
46029 Suzzara - Mantua - Italy

DECLARES on its own responsibility, that the equipment described below:

Description:	Dispenser for diesel fuel
Model:	SELF SERVICE AGILIS
Serial number:	see the Lot Number on the plate affixed to the product
Year of construction:	see the production year on the plate stamped on the product.

Complies with the following legislation:

- **Machinery Directive 2006/42/EC**
- **- Electromagnetic Compatibility Directive 2014/30/EU**
- **- Restriction of Hazardous Substances Directive (RoHS) 2011/65/EU**
- - Radio Equipment Directive (RED) 2014/53/EU

The technical file is at the disposal of the competent authorities in response to a motivated request made to

PIUSI S.p.A. PRODUCT or further to a request sent by e-mail to: **doc_tec@piusi.com.**

THE ORIGINAL DECLARATION OF CONFORMITY IS SUPPLIED SEPARATELY IN CONJUNCTION WITH THE PRODUCT

Suzzara, 23/08/2021

Otto Varini
Legal representative

FAC SIMILE

This manual is the property of PIUSI S.p.A. Whole or partial reproduction of this manual is forbidden.

2 GENERAL PRECAUTIONS

In order to protect workers' safety and to avoid the risk of any damage, before performing any operation, please read and become familiar with the contents of the instruction manual.

2.1 SYMBOLS USED IN THE MANUAL

In order to signal particularly important instructions or warnings, the following symbols are used:

	ELECTRICAL HAZARD This symbol identifies the risk of electric shock from equipment powered by voltages potentially dangerous for humans.
	CAUTION This symbol indicates accident prevention regulations addressed to operators and/or other people concerned.
	WARNING This symbol indicates that there is a possibility of damaging the units and/or their components.
	NOTE This symbol indicates useful information.
	Read the instruction manual carefully.

2.2 MANUAL STORAGE

This manual must be intact and completely readable. The final users, as well as the qualified technicians authorised to installation and maintenance must be able to view it at any time.

2.3 RIGHTS FOR REPRODUCTION

THIS MANUAL BELONGS TO PIUSI S.p.A.
All rights for reproduction are reserved for PIUSI S.p.A.
The text cannot be used in other printed documents unless expressly authorised in written form by PIUSI S.p.A.
© PIUSI S.p.A. - WHOLE OR PARTIAL REPRODUCTION OF THIS MANUAL IS FORBIDDEN.
PIUSI S.p.A. is the exclusive owner of all rights envisaged by applicable laws, including the rules concerning copyrights. All the rights deriving from such norms belong to PIUSI S.p.A.
Reproduction, publication, editing, transcription, public disclosure, distribution, sale in any form, translation and/or processing, loan, and any other activity concerning this manual, also partial, are reserved by law to PIUSI S.p.A.

3 INSTRUCTIONS AND SAFETY NORMS

	ELECTRIC SHOCK: RISK OF ELECTRIC SHOCK OR FATAL ELECTROCUTION Risk of Electric shock or Fatal Electrocution due to electrical equipment with voltage of more than 50Vac. **DISCONNECT THE POWER SUPPLY BEFORE CARRYING OUT ANY CHECKS OR MAINTENANCE WORK** Installation operations are carried out with open junction boxes and accessible electrical contacts. All these operations must be carried out with the unit isolated from the mains in order to avoid hazards of electrocution. **As a general rule of electrical safety it is always recommended to power the device by protecting the line with:** - circuit breaker/disconnector with a current rating suitable for the power line and the supplied devices; - 30 mA residual current device (ground fault circuit interrupter, or GFCI). - Connect only to sockets with a protective earth connection using conductors of adequate cross-section and characteristics based on the installation type and on statutory legislation. In outdoor use, use only extensions suitable for the specific use, according to the regulations in force. Unsuitable extension cables can be dangerous. The electrical connection between the plug and socket must be kept well away from water. Before each use, check that the mains connection cable and the plug are not damaged. If damaged, have the cable and plug replaced by qualified personnel. Never touch the plug or the socket with wet hands.
	FIRE HAZARD If there are flammable liquids in the working area, flammable vapours may be present and may cause fire or explosion during use.
	EXPLOSION HAZARDS To eliminate fire and explosion hazards use the dispenser only in well ventilated places. Keep work area free of debris, including rags and spilled or open containers of solvent and gasoline. Do not plug or unplug power cords or turn lights on or off when flammable fumes are present. Keep a working fire extinguisher in the work area.
	RISK OF FIRE AND EXPLOSION **This product is NOT SUITABLE for use in Classified Areas subject to the presence of potentially explosive atmospheres.** Mobile phone use when refilling vehicles, also with other non-flammable liquids is in any case strongly discouraged as it can cause distractions that may prove hazardous. PIUSI shall not be held liable in the event of damage to persons or property of the user or third parties resulting from failure to comply with the above warnings and / or any other negligent, reckless or inept behaviour of the user.

This manual is the property of PIUSI S.p.A. Whole or partial reproduction of this manual is forbidden.

	This equipment must have a protective earth connection between metal masses and for electrical components that require grounding. Improper installation or use of the equipment may result in danger of electric shock. All electrical equipment in the work area must have a protective earth connection. Stop operation immediately if static sparking occurs or if you feel a shock. Do not use the dispenser until you have identified and rectified the issue. As a general rule of electrical safety it is always recommended to power the device by protecting the line with: - circuit breaker/disconnector with a current rating suitable for the power line and the supplied devices - 30 mA residual current device (ground fault circuit interrupter, or GFCI). Connect only to sockets with a protective earth connection using conductors of adequate cross-section and characteristics based on the installation type and on statutory legislation. In outdoor use, use only extensions suitable for the specific use, according to the regulations in force. Unsuitable extension cables can be dangerous. The electrical connection between the plug and socket must be kept well away from water. Before each use, check that the mains connection cable and the plug are not damaged. If damaged, have the cable and plug replaced by qualified personnel. Never touch the plug or the socket with wet hands. Do not switch on the fluid dispensing equipment with damaged electrical parts, such as cables, or damaged hydraulic parts, such as the suction/delivery pipe or the delivery nozzle. Call the maintenance technicians immediately and replace all damaged parts before using the equipment.
	You must avoid any contact between the electrical power supply and the fluid that needs to be pumped. Install the equipment in a sheltered location. Do not expose to rain. Do not switch on the fluid dispensing equipment with damaged electrical parts, such as cables, or damaged hydraulic parts, such as the suction/delivery pipe or the delivery nozzle. Call the maintenance technicians immediately and replace all damaged parts before using the equipment.
	DANGER OF BURNS To avoid severe burns, do not touch liquids or equipment.
	NO SMOKING Do not smoke near the fuel transfer pump and do not use the pump near naked flames.

PRECAUTIONS FOR USE	
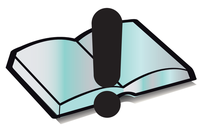	**PERSONAL PROTECTION EQUIPMENT FEATURES** Wear personal protection equipment that is: - suitable to the operations to be performed; - resistant to the various cleaning products used.
PERSONAL PROTECTIVE EQUIPMENT TO BE WORN	
	Safety shoes
	Close-fitting clothes

	Protective gloves
	Safety glasses

OTHER SAFETY DEVICES	
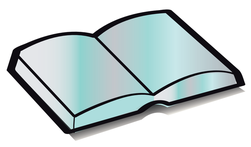	**INSTRUCTION MANUAL** - Do not operate the unit when fatigued or under the influence of drugs or alcohol. - Do not leave the work area while equipment is energised or in operation. - Turn off the equipment when not in use. - Do not alter or modify the equipment. Alterations or modifications may void agency approvals and create safety hazards. - Route hoses and cables away from traffic areas, sharp edges, moving parts, and hot surfaces. - Do not twist the hose or use a stronger hose. - Keep children and animals away from the working area. - Respect all safety norms in force. - Do not exceed the maximum working pressure or temperature of the component with the lowest system rating. - See the technical specifications in all machine manuals. - Use liquids and solvents that are compatible with the wet parts of the unit. See the technical specifications in all machine manuals. Read the manufacturer's warnings for liquids and solvents. To obtain more information about the material, request the Safety Data Sheet (MSDS) from your "AGILIS" distributor or dealer. - Check the unit every day. Repair or replace worn or damaged parts immediately with original manufacturer's spare parts only. - Make sure that the unit is classified and approved in accordance with the regulations for the environment in which it is used. - Use only the unit for its intended purpose. Contact your Dealer for more information. - Keep hoses and cables away from transit areas, edges, moving parts and hot surfaces. - Do not bend hoses excessively or use them to pull the unit.
	TOXIC FLUID OR FUMES HAZARD For issues arising from the treated product with eyes, skin, inhalation and ingestion refer to the safety data sheet of the fluid used Store hazardous fluid in approved containers, and dispose of it according to applicable guidelines. Prolonged contact with the product may cause skin irritation; during delivery phases, always wear protective gloves.
	EQUIPMENT MISUSE Do not use the equipment for uses other than those for which it is designed and built. All different uses may be hazardous for property, animals, or persons.

This manual is the property of PIUSI S.p.A. Whole or partial reproduction of this manual is forbidden.

4 FIRST AID MEASURES

PERSONS WHO HAVE SUFFERED ELECTRIC SHOCK

Disconnect the power source, or use a dry insulator to protect yourself while you move the injured person away from any electrical conductor. Avoid touching the injured person with your bare hands until he is far away from any conductor. Immediately call for help from qualified and trained personnel. Do not operate switches with wet hands.

5 TRANSPORT, HANDLING AND UNPACKING

The SELF SERVICE AGILIS unit is shipped packaged in a non-stackable cardboard box. During storage the machine must be kept in an upright position as indicated by the graphic symbols printed on the box showing the direction of handling.
Whenever the machine needs lifting, make sure all the hoisting gear and accessories (such as the rigging belts) have an adequate load bearing capacity. Mechanical handling and lifting gear must only be used by authorised and suitably trained staff.
During periods of non-use, the machine, be it packed or unpacked, must be stored in an area protected against the elements (e.g. rain, humidity, direct sunlight, etc.) and dust.
Use scissors or a cutter to open the cardboard box, taking care not to damage the contents.
Two people must open the box completely and move the SELF SERVICE AGILIS unit into a vertical position to facilitate subsequent definitive positioning.
Once unpacked, the station should always be kept in a vertical position.
Put all packing elements (cardboard, wood, cellophane,polystyrene etc.) into the corresponding containers. Do not leave them in the environment or within children's reach as they are potentially dangerous.
They should be disposed of according to the regulations in force in the country where the unit will be used.

The packaging carries the following indications:
- 'THIS WAY UP' arrow;
- label with all the information relating to the equipment (model, weight, etc.).

6 DIMENSIONS AND WEIGHTS

	DISTRIBUTOR DIMENSIONS (mm)			PACKAGING DIMENSIONS (mm)			DISTRIBUTOR WEIGHT (kg)	PACKED DISTRIBUTOR WEIGHT (kg)
	A	B	C	A	B	C		
SELF SERVICE MCAGILIS	1391	491	382	1478	400	480	59.1	63.7
SELF SERVICE TANK MC AGILIS	994	491	382	1080	400	480	48.7	53.3

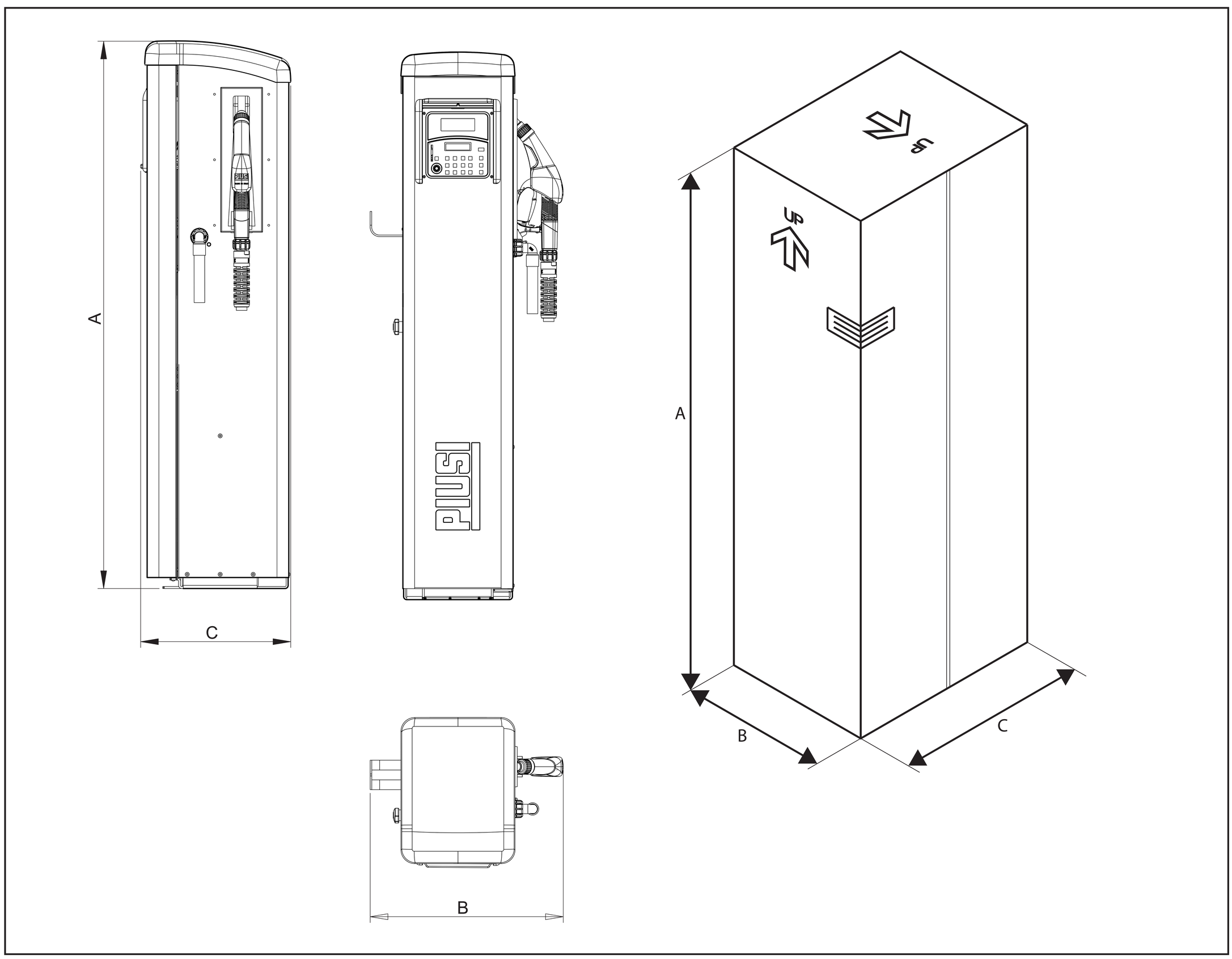

This manual is the property of PIUSI S.p.A. Whole or partial reproduction of this manual is forbidden.

7 PACKAGE CONTENTS/PRELIMINARY INSPECTION

FOREWORD

Use scissors or a cutter to open the cardboard box, taking care not to damage the contents.

NOTE: two people must open the box completely and move the SELF SERVICE unit into a vertical position to facilitate subsequent definitive positioning. Once unpacked, the distributor should always be kept in a vertical position.

Put all packing elements (cardboard, wood, cellophane,polystyrene etc.) into the corresponding containers. Do not leave them in the environment or within children's reach as they are potentially dangerous. They should be disposed of according to the regulations in force in the country where the unit will be used. Check the conditions of the unit making sure that no part shows such damages as compromise safety and functionality. In case of doubt, do not start up and contact the manufacturer's technical service.

Check if the accessory set is complete. At the end of the inspection, assemble the SELF SERVICE unit.

CAUTION:

1. Fit the hose support hook into the relative slots (1)
2. Tighten the screws to fix the hose bracket hook in the desired position. (2).
3. Mount the nozzle and hose as indicated in the "hydraulic connections" paragraph.

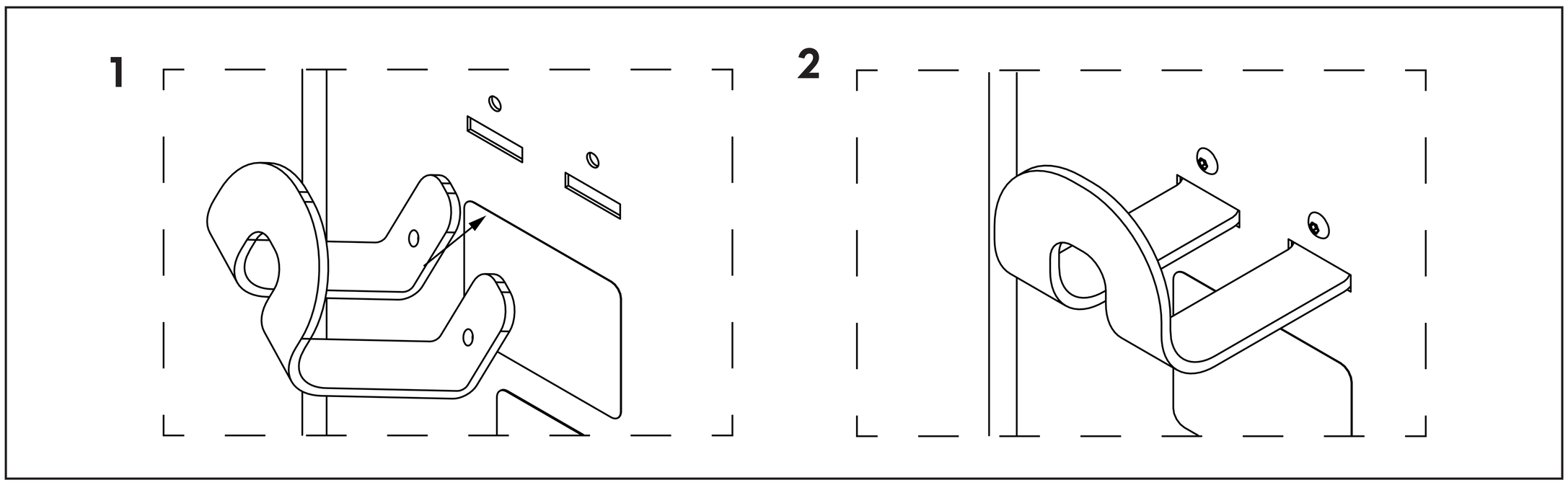

NOTE: use the roll of Teflon provided.

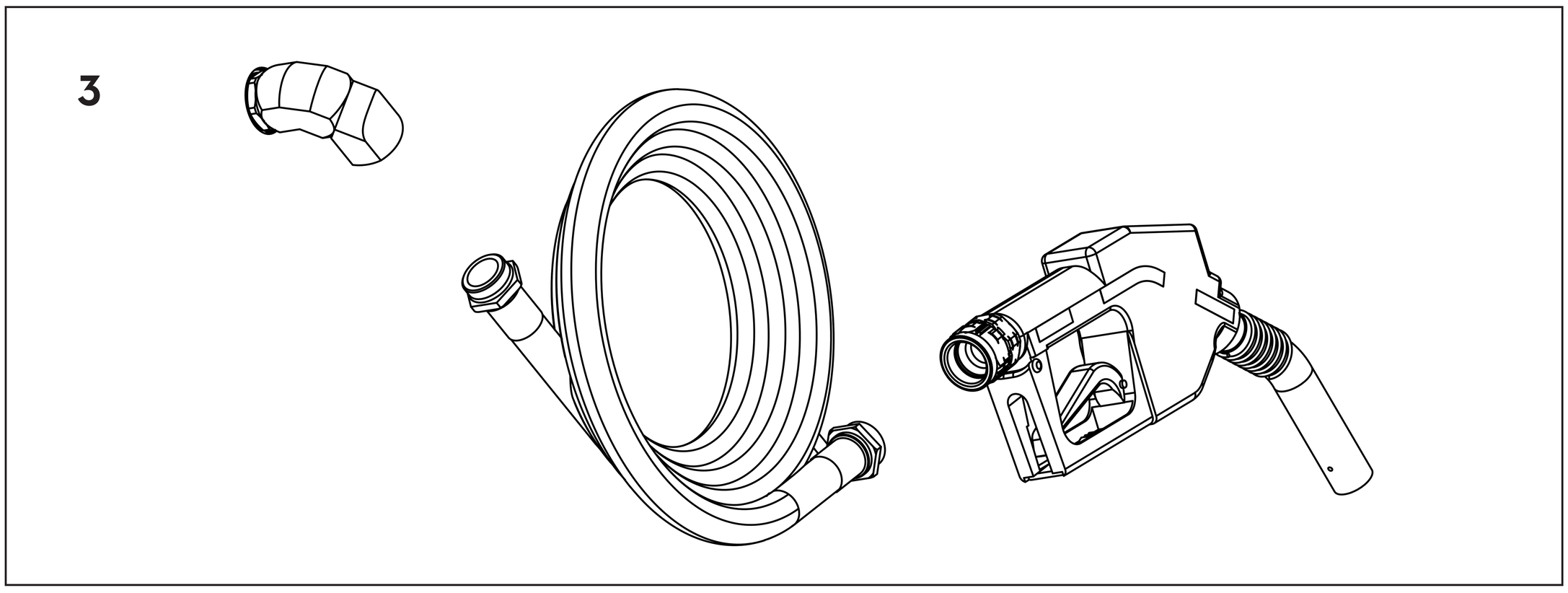

8 MACHINE AND MANUFACTURER IDENTIFICATION

SELF SERVICE AGILIS stations are equipped with an identification plate attached to the frame:
- Model.
- Serial number / year of manufacture.
- Technical data.
- CE marking.
- Manual code.

CAUTION: before installing, always make sure the type of dispensing system is correct and suitable for the available power supply (Voltage/Frequency).

8.1 PLATES POSITIONS

The dispensing system is equipped with adhesive decals containing key information for the operator. Make sure the decals do not deteriorate or become detached from the equipment over time.

NOTE: should this occur, please contact customer service and request replacements for any damaged or missing decals, then affix the new decals in their designated positions.

This manual is the property of PIUSI S.p.A. Whole or partial reproduction of this manual is forbidden.

Decals are the following ones:

12345678MT001 12345678MT001	**Product warranty label**
PIUSI Code XXXXXXXXX FAC SIMILE	**CE plate with technical data**
ATTENTION! IT LEGGERE ATTENTAMENTE LE ISTRUZIONI PRIMA DELLA MESSA IN SERVIZIO UK READ ISTRUCTION BEFORE TO START-UP FR LIRE ATTENTIVEMENT LES INSTRUCTIONS AVANT DE LA MISE EN SERVICE DE VOR DER INBETRIEBNAHME AUFMERKSAM DIE ANWEISUNGEN LESEN ES LEER ATENTAMENTE LAS INSTRUCCIONES ANTES DE LA PUESTA EN SERVICIO DA LÆS BRUGERVEJLEDNINGEN GRUNDIGT FØR IGANGSÆTNING	**Attention plate** **Affixed to the SELF SERVICE display**
PIUSI Code XXXXXXXXX Description SELF SERVICE 100-240V LOT NUMBER 1234567 Q.ty 1 Weight 6,202 Kg 11,470 (LBS) MADE IN ITALY FAC SIMILE	**Corner label plate applied on the box**

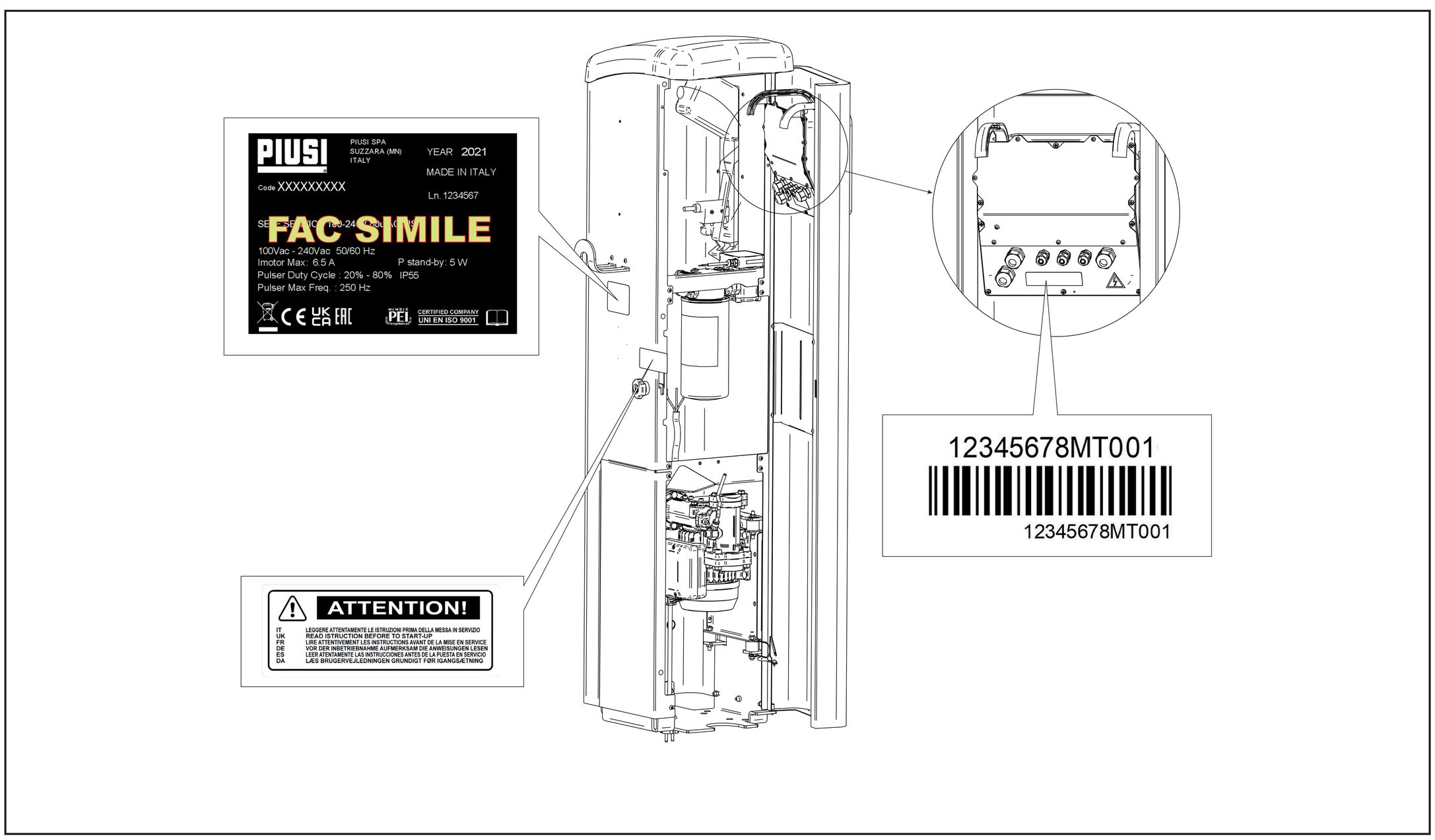

9 DESCRIPTION OF MAIN PARTS

9.1 BODY

FOREWORD
The body of the SELF SERVICE dispenser consists of a robust treated steel shell, closed on top by a plastic cover and a sturdy base for attaching it to the ground.
The front panel is entirely hinged to provide easy access to the internal components of the dispenser (pump, filter, meter) and secured by a lock.
The right side panel of the distributor can be easily detached to allow installation and/or maintenance operations.

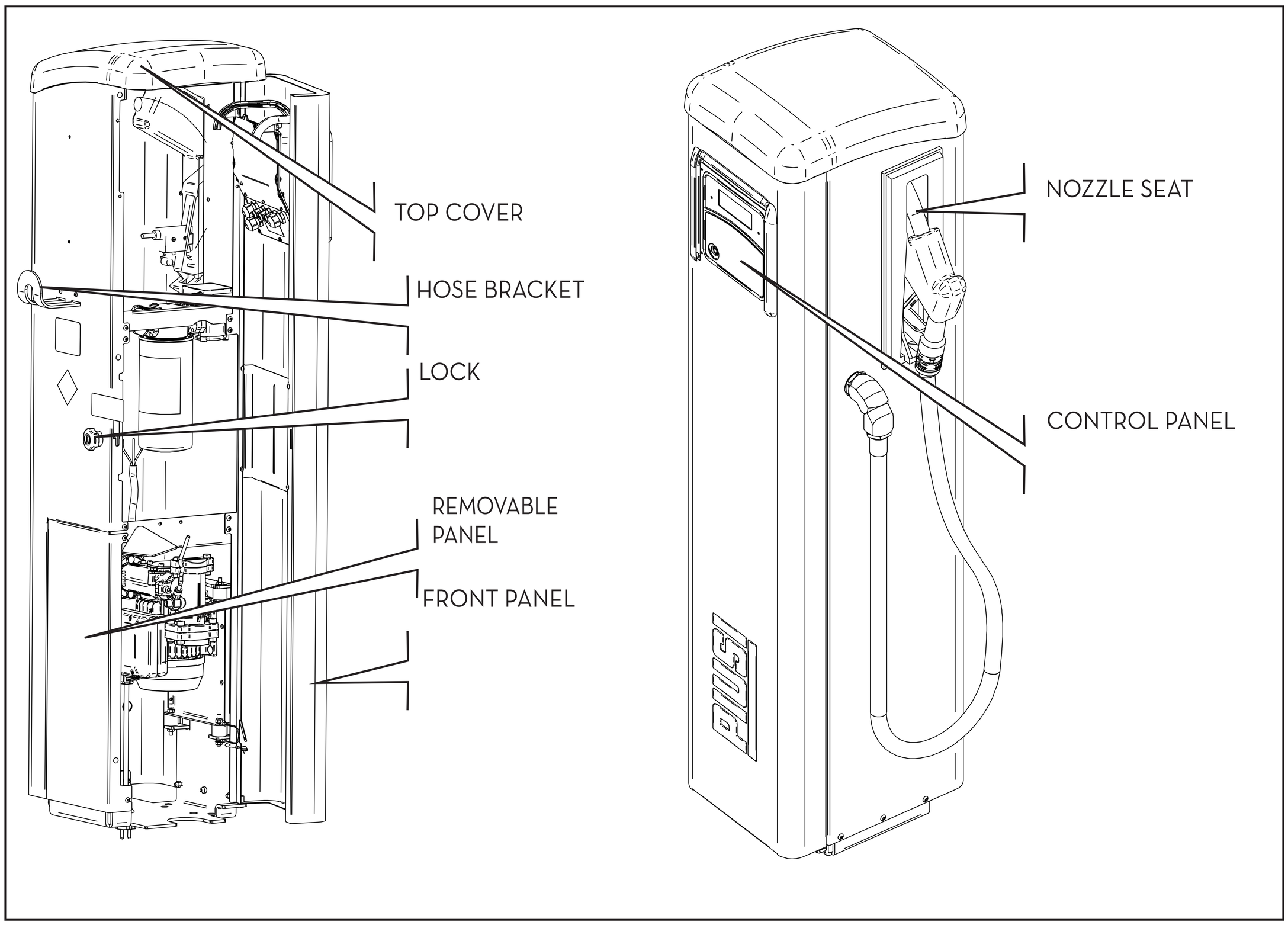

9.2 PUMPING UNIT

Unit with self-priming vane electric pump, equipped with by-pass valve. This valve allows operation for short periods even with the dispensing nozzle closed.
The motor, directly coupled to the pump casing, is asynchronous, enclosed type (IP55 protection class according to the EN 60034-5-86 norm), self-ventilated, single-phase. An easy-clean ANGLED MESH FILTER is connected to the pump inlet (See relevant manual).

This manual is the property of PIUSI S.p.A. Whole or partial reproduction of this manual is forbidden.

9.3 PULSER FLOW METER

The Pulser K600/3 flow meter has a high-precision oval gear measuring system designed to allow accurate fuel measurement.
They consist of a sturdy die-cast aluminium structure, complete with inlet filter and are easy to maintain and reliable. For further information, please refer to the dedicated manual.

9.4 DISPENSING NOZZLE

The dispensing nozzle supplied with SELF SERVICE is an automatic type, with a full-tank stop device.

9.5 LEVEL INDICATOR

The level indicators to which the dispenser can be connected are only clean contacts.

9.6 DISPLAY COVER

To ensure adequate protection to the panel, a damper display cover has been designed which can be lowered if necessary.
It is advisable, in very strong sunlight conditions, to keep the display cover always lowered.

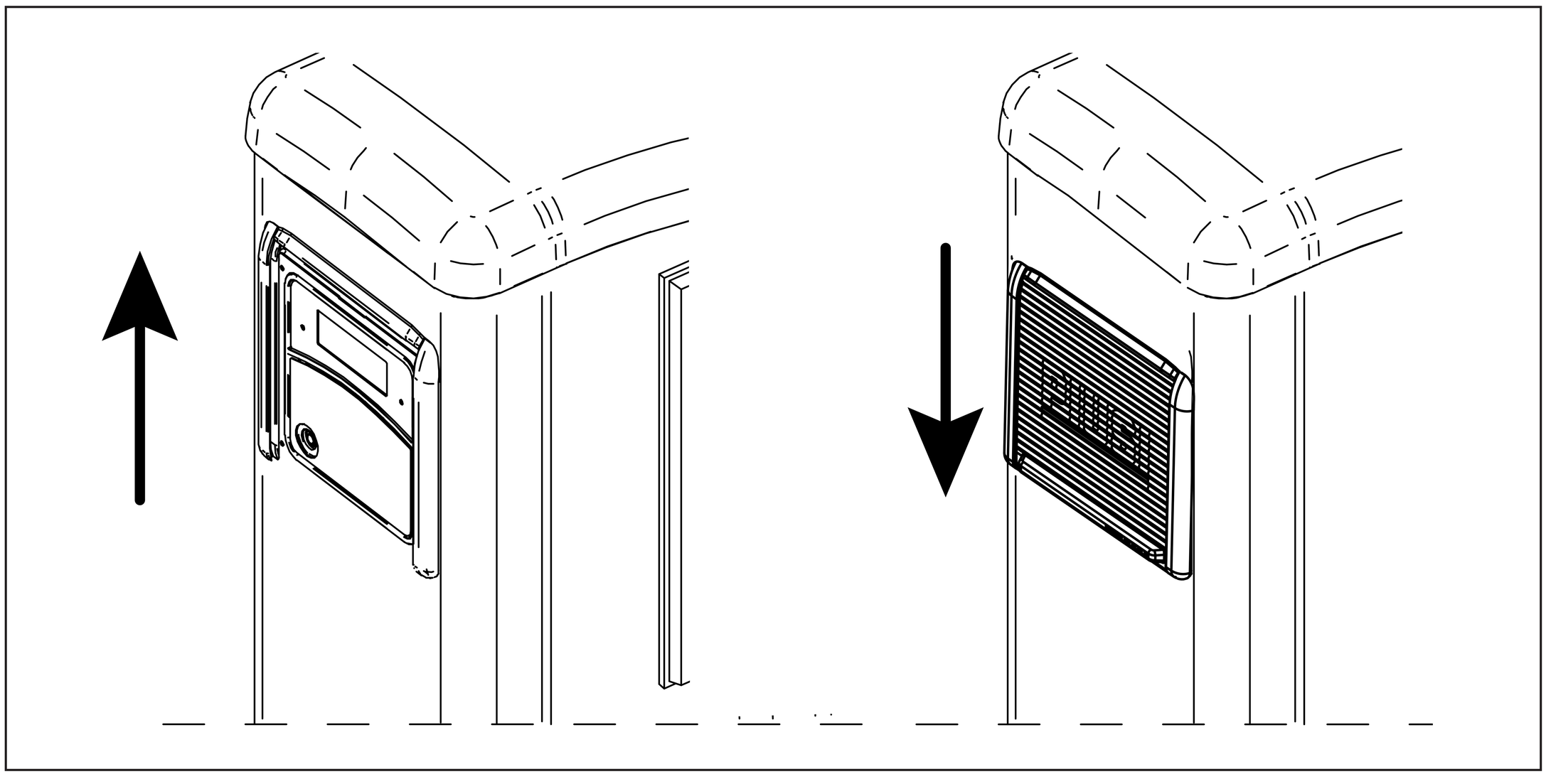

9.7 MANAGING SYSTEM

The AGILIS controller allows only authorised users to dispense fuel. All transaction data are saved and can be downloaded to a PC (optional).

EXPLANATORY DIAGRAM:

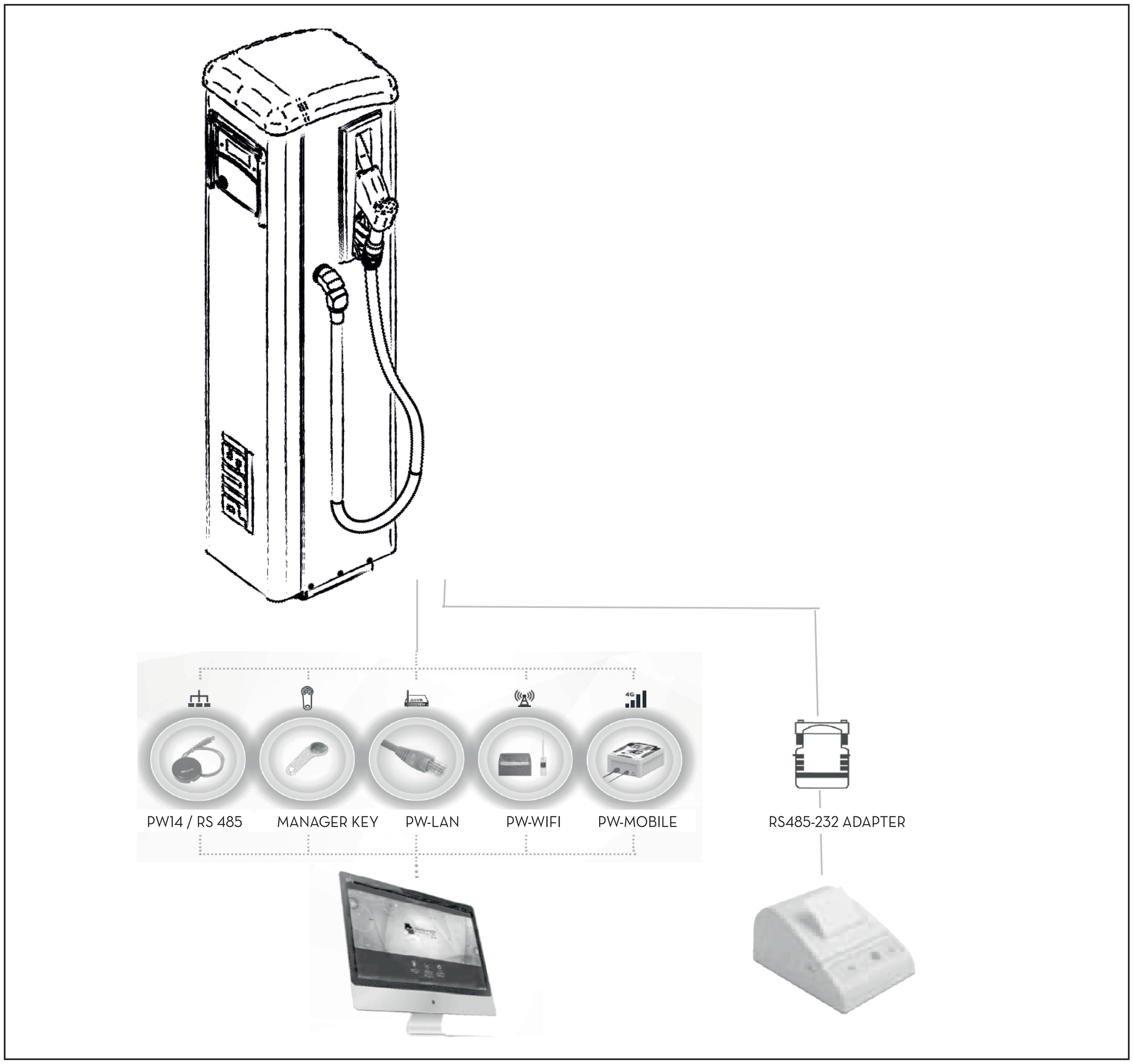

This manual is the property of PIUSI S.p.A. Whole or partial reproduction of this manual is forbidden.

10 BRIEF OVERVIEW OF FEATURES

10.1 ACCESS CONTROL

The presence of a SELF SERVICE guarantees restricted access by authorized users only.
The SELF SERVICE recognizes the User's authorization through two alternative systems:
- 4-digit PIN CODE;
- ELECTRONIC USER KEY.

10.2 USERS

There are two types of user, with different levels of access:
- MANAGER - ONLY ONE per SELF SERVICE system. The MANAGER has a MASTER PIN CODE or MASTER KEY.
- USER – from 80 to 250 users, depending on the model of SELF SERVICE system. Each USER has their own USER PIN CODE or USER KEY.

10.3 CONFIGURATION

Configuration can only be done by the MANAGER, and enables the SELF SERVICE to be customised for the installation in question. Configuration operations include:
- Setting the installation name.
- Requesting optional inputs (vehicle registration number / mileage).
- Setting a transaction timeout.
- Configuring the remote printer.
- Setting the dispensing unit.
- Configuring the connection to a PC for data collection.
- Enabling and configuring the the level contact.
- Setting the MASTER CODE.

N.B.: the MASTER PIN CODE is set to 1234 when the unit is delivered.

The manager can change this as he wishes. If the manager forgets or loses his MASTER PIN CODE, he will no longer have access to the manager options. If this happens, the manager can contact the SERVICE DEPARTMENT for the SUPER MASTER CODE, which allows him to access the lost MASTER CODE.

The SUPER MASTER CODE, which is different for each installation, cannot be changed, and must be kept absolutely confidential.

10.4 MANAGEMENT

These options are only available to the MANAGER for controlling the use of the SELF SERVICE.
The management operations include:
- managing user authorisations;
- managing system data (memory / date / time);
- Electronically calibration of the SELF SERVICE's liter counter;
- downloading data from the SELF SERVICE to the PC with the MASTER KEY.

OPTIONAL management operations include:
- printing out a variety of transaction reports on a remote printer;
- printing out the list of users on a remote printer;
- printing out the system configuration on a remote printer.

10.5 DISPENSING

This transaction, which is only available to USERS, dispenses fuel to the user:
- the user may be asked to enter his registration number (REG. NUMBER) or another number or code to which the registration is associated:
- the user may be asked to enter the vehicle's mileage (ODOMETER);
- he may be asked to select how much fuel is to be dispensed (PRESET).

10.6 DATA MANAGEMENT WITH A PC (OPTIONAL)

Transaction data, which is saved to the SELF SERVICE AGILIS's non-volatile memory, can be downloaded to a PC for archiving and processing.
The PC must be equipped with the AGILIS SELF SERVICE MANAGEMENT software, supplied separately as a SELF SERVICE option. The data can be transferred from the SELF SERVICE to the PC in a variety of ways, cabled or wireless.
A number of optional accessories are available to satisfy the communications requirements of the installation:

Serial cable connection:	this connection uses an RS485 cable of up to 1,000 m to connect to the PC's USB port using the Piusi PW-14 adapter.
Ethernet cable connection:	this method uses the Piusi PW-LAN adapter.
Wireless connection:	this method uses the Piusi PW-WiFi adapter.
Long range wireless connection:	the Piusi PW-Mobile adapter is available, which connects to the 4G cellular network.
Data transfer using the manager's i-Button key:	a KEY READER is available for connection to the PC's USB port.

10.7 PERFORMANCE

- Can handle up to 250 users (depending on the model) using 4-digit PIN codes or i-button keys.
- Calculates the period consumption for each user (using the PC software).
- On-board memory for the last 255 transactions.
- Option to enter the vehicle code and mileage.
- Management of transaction date and time.
- Dedicated software for printing out transaction reports and summaries per user.
- Option to handle up to 16 devices using special software.

This manual is the property of PIUSI S.p.A. Whole or partial reproduction of this manual is forbidden.

11 INTENDED USE

11.1 INTENDED USE

SELF SERVICE has been designed to manage dispensing transactions for private filling stations.
Use for the management of other systems is neither envisaged or permitted.

CAUTION: **ambient conditions for use**
Ambient temperature: min. -20°C / max. +40°C
Relative humidity: max 90%.
The temperature limits indicated apply to the pump components and must be observed to avoid any damage or malfunctions.

11.2 IMPROPER USE

CAUTION: **flammable liquids and explosive atmospheres**
SELF SERVICE has not been designed to comply with the ATEX directive or to operate in potentially explosive atmospheres.
Do not install the SELF SERVICE in a potentially explosive location.
The system was not designed for dispensing of diesel, petrol, flammable liquids with flash point <55°C/131°F, or for operation in environments with potentially explosive atmosphere.
The use in the above mentioned conditions is forbidden.

CAUTION: **improper use**
It is strictly forbidden to use the system for purposes other than the ones indicated. Any other use different from the one for which the system has been conceived and described in this manual is considered “MISUSE”. Therefore, PIUSI S.p.A. shall not be held responsible for any damage caused to people, animals or to the system itself.

12 TECHNICAL CHARACTERISTICS

INTENDED USE

Implementation of a fluid delivery and control system for private use and not subject to special regulations such as ATEX standards for potentially explosive atmospheres.

⚠ CAUTION: do not install SELF SERVICE in potentially explosive locations according to Atex directive.

MAXIMUM ELECTRICAL PARAMETER VARIATIONS

The electrical motors installed in the dispensers can handle the following maximum variations:
- power supply voltage +/- 5%,

and
- Frequency +/- 2%.

SEE THE TECHNICAL DATA TABLE BELOW

⚠ CAUTION: before installing, always make sure the type of dispensing system is correct and suitable for the available power supply (voltage/frequency).

Technical data	Standard conditions	Limits	Note
Power supply input	230 Vac / 50 Hz	Maximum power absorption with motor running: 800 W – 3,9 A for models Self Service 70 MC and Self Service Tank 70 MC; 1100 W – 5,5 A for models Self Service 100 MC and Self Service Tank 100 MC;	Maximum power absorbed in stand-by: 5 W
Electronic Key Interface	YELLOW key (i-Button): Enabling input from PIUSI electronic key.	The yellow drivers' keys are registered on the PC via a software procedure so that the drivers are enabled to use one or more refuelling stations.	It is possible to configure the presence or not of said key.
Motor piloting output	230 Vac / 50 Hz	800 W – 3,9 A for models Self Service 70 MC and Self Service Tank 70 MC; 1100 W – 5,5 A for models Self Service 100 MC and Self Service Tank 100 MC;	Used pumps: Panther 72 for models Self Service 70 MC and Self Service Tank 70 MC; E120 for models Self Service 100 MC and Self Service Tank 100 MC1
Flow rate	68 l/min for models Self Service 70 MC; 70 l/min for models Self Service TANK 70 MC; 85 l/min for models Self Service 100 MC; 90 l/min for models Self Service TANK 100 MC.		
Pulser IN input	Free contact or Open Collector electronic signal (NPN)	Approximately 250 µA at 5Vdc will be supplied to the clean contact (or open collector).	The input signal may have a maximum frequency of 300 Hz with a Duty Cycle between 20% - 80%.

This manual is the property of PIUSI S.p.A. Whole or partial reproduction of this manual is forbidden.

Technical data	Standard conditions	Limits	Note
Level 1 contact input (Only for versions where available)	Clean contact or Open Collector electronic signal (NPN). Should it be necessary to power a level sensor, 24Vdc are also available on the terminal. The maximum current available to power the sensor is 25 mA.	Approximately 250 µA at 5 Vdc will be supplied to the clean contact (or open collector).	It is possible to configure the presence or not of this signal, furthermore it is possible to configure the type of signal (normally open or normally closed for those versions where envisaged). Finally, it is possible to select the action which the main controller must perform when it receives this signal: it may simply generate an alarm on the display or completely inhibit further dispensing if Block Pump is set.
Level 2 contact input Level 2 (only for versions where available)		Approximately 250 µA at 5 Vdc will be supplied to the clean contact (or open collector).	
Auxiliary power supply output 24 Vdc	Auxiliary 24 Vdc power supply output to power external electronic devices.	Imax = 25 mA.	The device being powered must not absorb more than 25 mA with a 24 Vdc power supply. Typically it could be a level sensor.
Fuses	F1 (Vac power supply input) 800 mA T (delayed). F2 (motor output) 20 A T (delayed). F3 (AC/DC output) 800 mA T (delayed).		
IP Protection Rating	IP 55		
Working temperature	From -20° C to +40°C		
Storage temperature	From -20° C to +60°C		
Humidity	< 90%		
Wiring distances	Max pulser distance	15 m	
	Max level sensors distance	100 m	
Display and counting limits	Floating decimal point sequence: 0.00 -> 99.99 -> 999.9 -> 9999. The maximum quantity which can be dispensed is 9999 units, regardless of the unit of measure set, be it litres, gallons or pints. 0.00 → 9.999 → 99.99 → 999.9 → 9999		
	PRESET: Maximum preset quantity	9999 litres/gallons/pints	
Memory storage	The Electronic Controller can store: Up to 250 Users Up to 255 dispensing cycles		

13 INSTALLATION

FOREWORD

SELF SERVICE can be installed outdoors.
However, it is advisable to shelter it under a canopy to ensure a longer service life and provide more comfort when refilling in bad weather.
Installation must be carried out by specialised personnel in accordance with the instructions provided in this chapter.

WARNING: **Personnel authorised to install the device**

All installation procedures must be performed exclusively by qualified and authorised staff. They must:
- Install the system in a dry and well ventilated place;
- Properly install all the components necessary for the equipment to function properly;
- Only use accessories that have been supplied with the system.

CAUTION: use of unsuitable accessories not supplied with the system is strictly prohibited. PIUSI S.p.A. shall not be held responsible for damages caused to people, things or to the environment deriving from failure to meet such instructions.

THE UNIT IS FOR PROFESSIONAL USE ONLY.

The equipment must be installed in a well lit place, in compliance with the norms in force.

The equipment has been designed to be used in a dry environment. If it is installed outdoors, provide adequate protective covering.

ELECTRICAL CONNECTIONS

The electrical connections must be carried out in a workmanlike manner by specialised personnel, in full compliance with the regulations in force in the country of installation and with the instructions in the electrical diagrams in this manual.

CAUTION: the SELF SERVICE panel is NOT equipped with a circuit breaker; it is therefore essential that a power enclosure be installed upline of the SELF SERVICE with a master power switch with circuit breaker suited to the type of SELF SERVICE in question, or at least a fast disconnection system like plug/socket assembly for use in case of anomalies;

The installer must provide a socket/plug connection which allows the electrical system to be rapidly disconnected in the event of any anomalies.

CAUTION: before accessing the electrical parts, make sure that you have disconnected all the main switches that energise the unit.

13.1 DANGEROUS AREA

Any fuel dispenser is considered a danger zone as defined in the National Electrical Code. Installation must be performed in compliance with the following standards:
- National Electrical Code (NFPA No. 70).
- Code for motor fuel dispensing facilities and repair garages (NFPA No. 30A).

WARNING: the installer is responsible for gaining familiarity with and observing all the relevant local codes.

The Product is designed for use in unclassified areas.
All the equipment must be installed outside the danger zones.

NOTE: local codes may impose specific installation requirements. Installation is subject to approval of the local authorities having jurisdiction for the site.

This manual is the property of PIUSI S.p.A. Whole or partial reproduction of this manual is forbidden.

13.2 POSITIONING THE DISPENSER

SELF SERVICE AGILIS should be positioned to ensure:
- Easy removal of detachable panels when access to internal components is required.
- Compliance with max. distances and difference in height between fuel transfer pump and tank.
- Correct and safe fixing of the body to the ground on a horizontal plane.

Distributor positioning establishes the following parameters, which characterise each installation:
- Hp: Priming height.
- Ls: total length of suction piping – from bottom valve to fuel transfer pump (in meters).

Correct operation of the units requires full respect of the following limits:
- Hp max: not exceeding 3 meters
- Ls max: not exceeding 15 meters

13.3 DISTRIBUTOR FIXING

The station should be attached to the ground with screw anchors suitable for M12 screws. They must be placed as indicated in the following pictures. The same figure also shows the two possible input positions (hose axis) of the suction hose, for the two types of connection to UNDERGROUND tank or ABOVE GROUND tank.
Before fixing the unit, make sure that the bearing area for station frame is flat and strong.
To facilitate SUCTION line connection, SELF SERVICE stations are compatible with BOTTOM inlet and rear inlet solutions.

ABOVE GROUND TANK

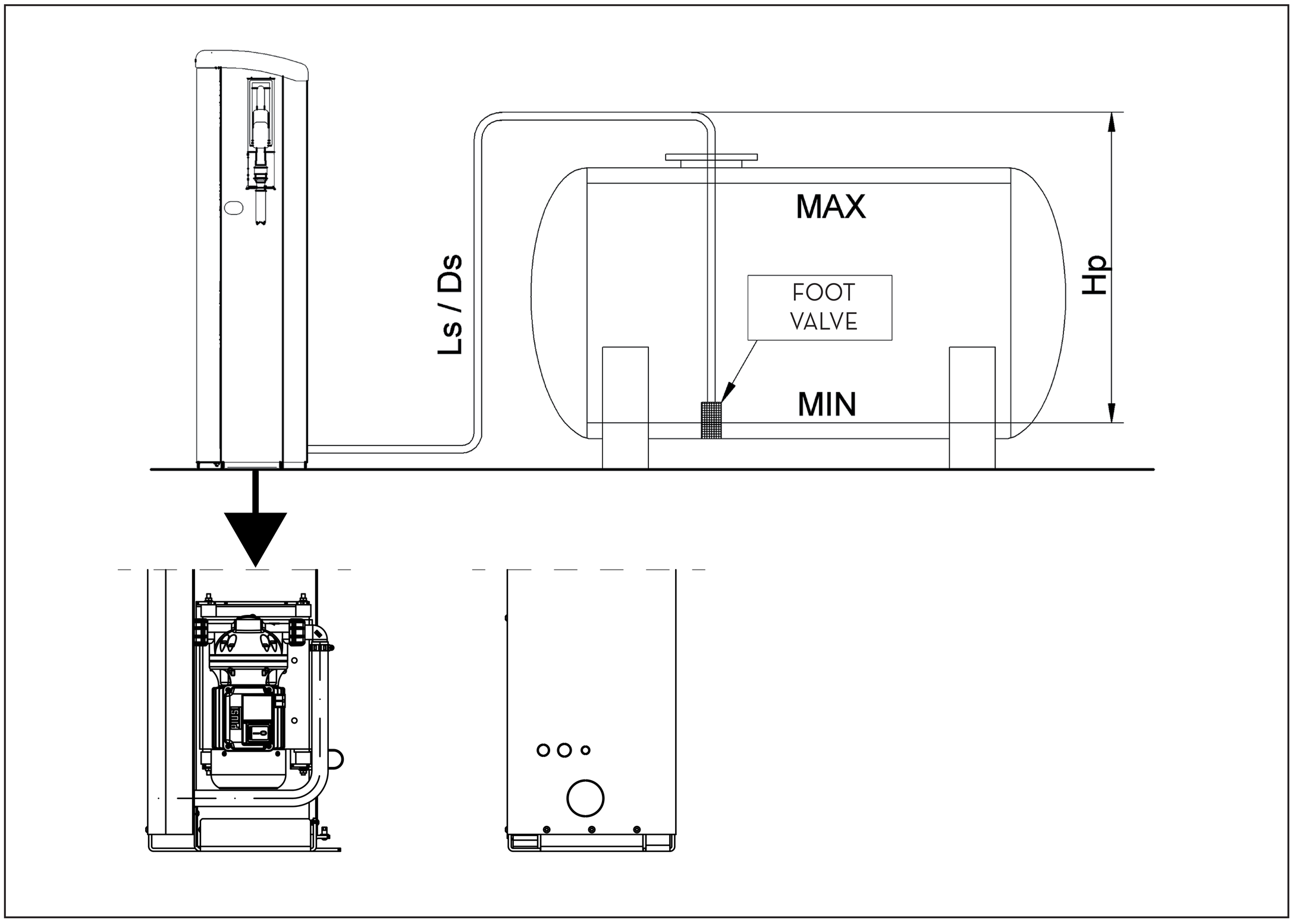

UNDERGROUND TANK

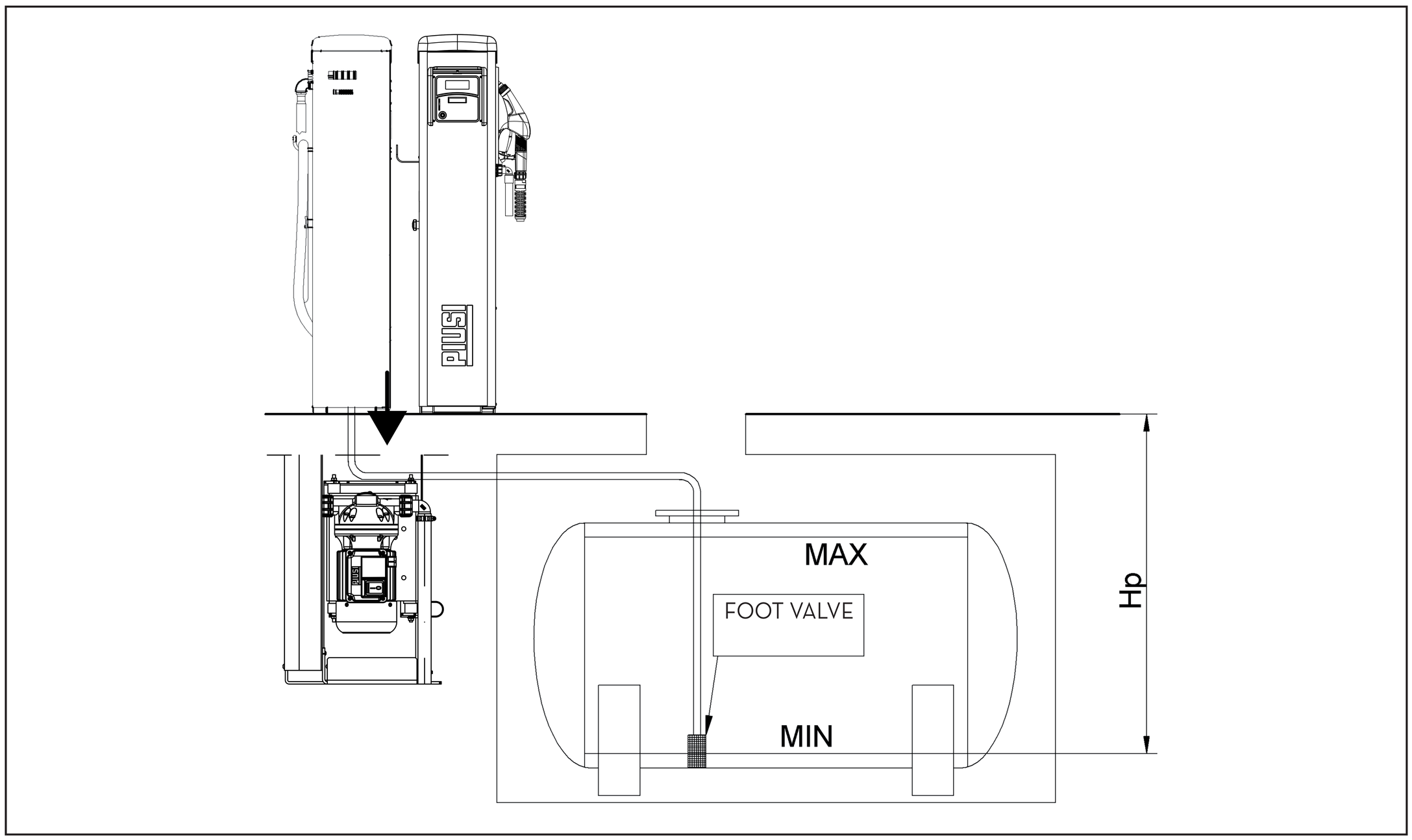

GROUND FIXING TEMPLATE

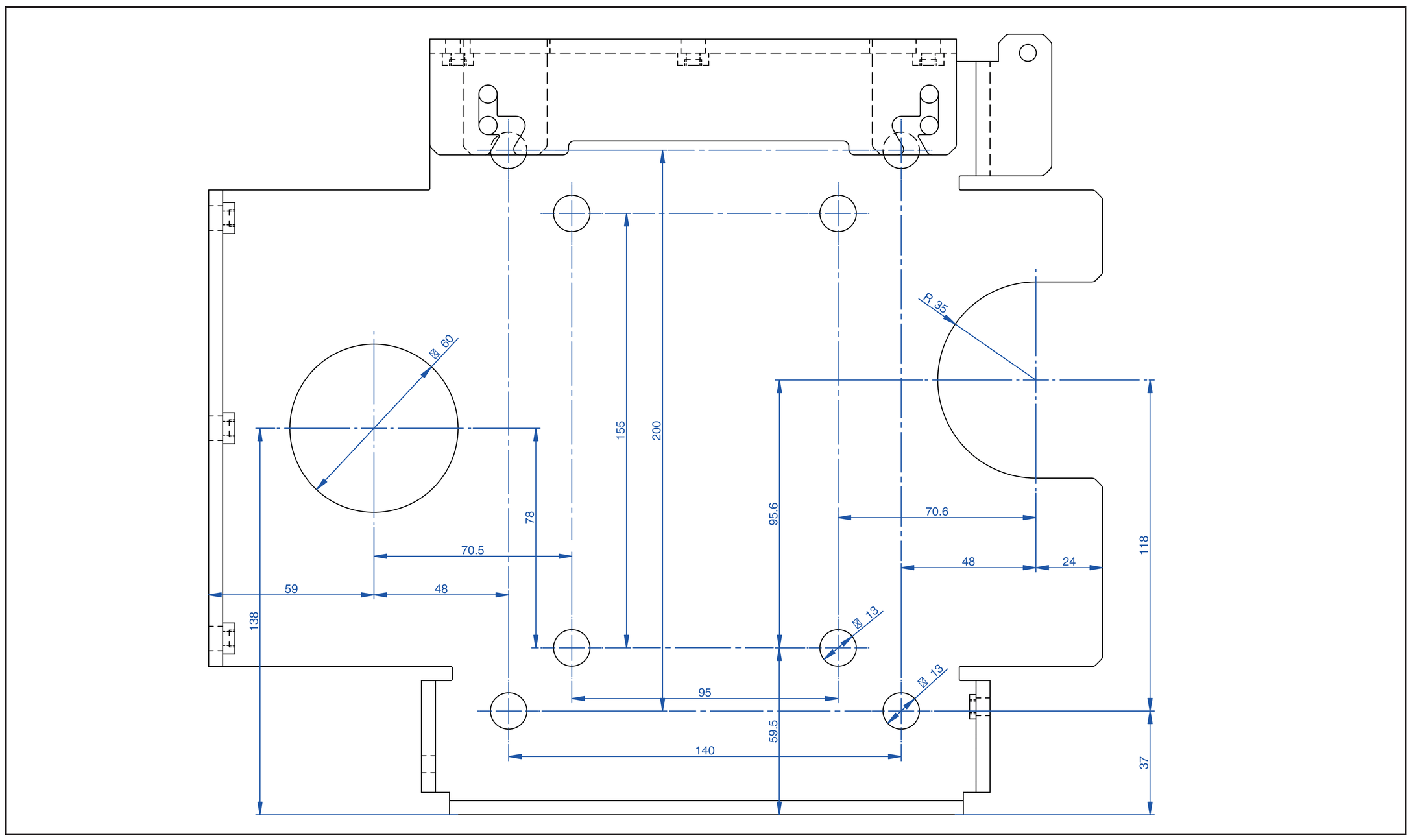

13.4 HYDRAULIC CONNECTIONS

FOREWORD

Always follow the below-listed WARNINGS:
- Use pipes and joints suitable for operation in vacuum conditions.
- Use pipes and accessories suitable for treated fluid. Unsuitable materials can result in serious damage to the pump; they can also cause pollution.
- Do not use conical threaded connectors that could cause damage to the threaded connector on the pump filter if tightened excessively.
- Use wide-radius bends so that pressure losses are reduced to minimum levels.
- Check that suction pipe is perfectly clean and free from debris.
- Install a foot valve equipped with filter at suction pipe end. Place the foot valve on tank bottom. Foot valve and pipe must have the same diameter.
- Before starting installation, make sure that no packing material is trapped in the piping.

13.4.1 SUCTION LINE

The diameter of the suction line “Ds” must be selected based on the model of fuel transfer pump and depending on its positioning in relation to the tank. With reference to the “Hp” and “Ls” values defined in the section “POSITIONING THE MOTOR”, the following MINIMUM DIAMETERS for the suction pipe must be observed.

13.4.2 MAXIMUM LENGTH OF SUCTION PIPING

The maximum length of the piping, the piping diameter and the height difference “Ho”, are parameters strictly linked to creating the conditions for suction.
The latter must not be such as to create a negative pressure of over 0.6 bar.
It follows that, after having observed the minimum piping diameter, set out in the “Recommendations and Warnings” section below, the maximum piping length is shorter the greater the height difference “Ho” the diesel must overcome and vice versa: in fact, negative pressure increases progressively by 0.08 bar per metre of increase in static pump height in relation to the liquid surface of the diesel fuel in the tank.

13.4.3 RECOMMENDATIONS AND WARNINGS

NOTE:
- The suction piping must be able to resist a pressure of at least 10 bar and must have an internal diameter of NO LESS THAN 1”1/4.
- The piping must also be suitable for working at negative pressure.
- Use piping and accessories suitable for handling diesel. Use of materials not suitable for handling diesel may result in damage to the pump, harm to people and can represent a pollution hazard.
- Any bends in the suction piping must have as large a radius as possible to limit friction loss to a minimum.
- Check that suction piping is clean and free from debris.

13.4.4 DELIVERY HOOK-UP DIAGRAM

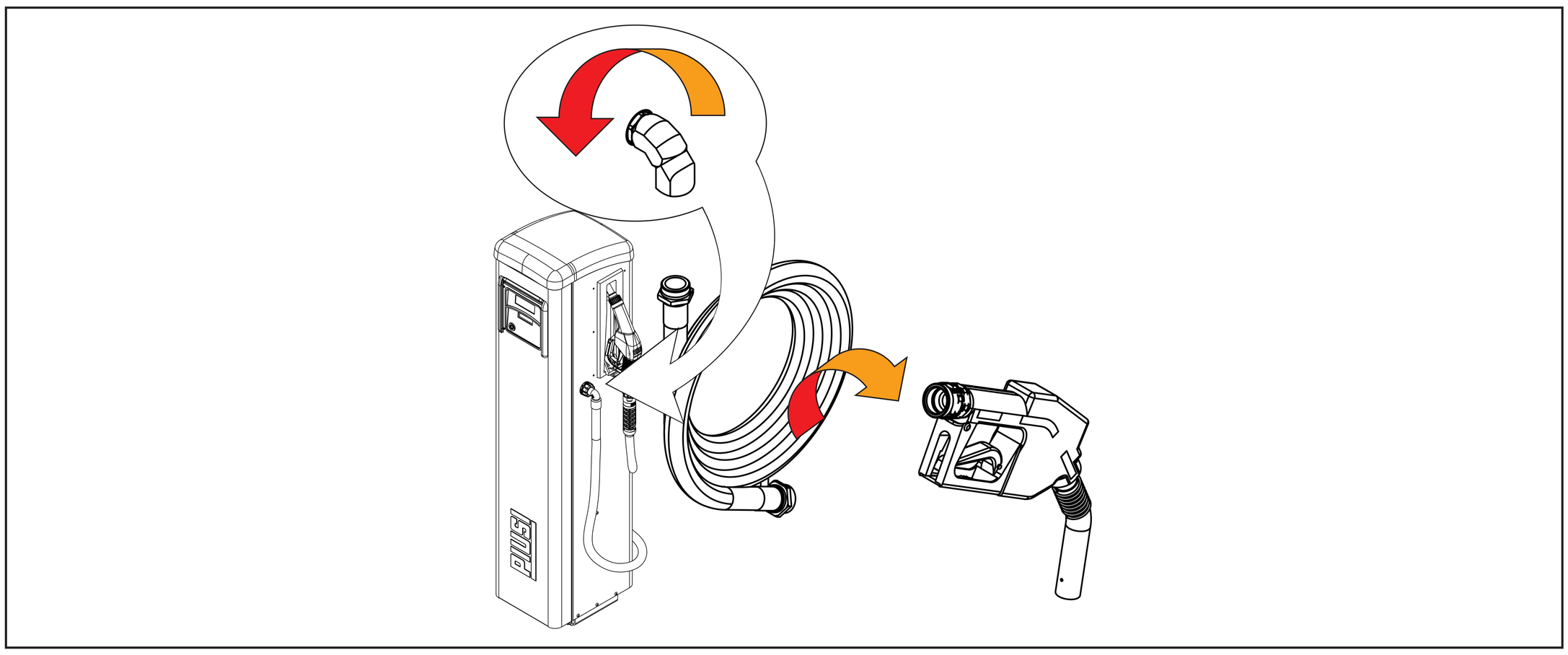

13.5 ELECTRICAL INSTALLATION

ELECTRICAL CONNECTIONS

CAUTION: The electrical connections must be carried out in a workmanlike manner by specialised personnel, in full compliance with the regulations in force in the country of installation and with the instructions in the electrical diagrams in this manual.

CAUTION: the SELF SERVICE AGILIS is NOT equipped with circuit breakers; it is therefore essential to install an electrical power supply panel upstream from SELF SERVICE AGILIS, equipped with a circuit breaker / disconnector with a current rating suitable for the power feeding line and a suitable RCD for the type of electrical load.
Otherwise, provide for a quick disconnection system such as a socket/plug connection to be used in the event of faults.

CAUTION: before accessing the electrical parts, make sure that you have disconnected all the main switches that energise the unit.

The operations required for correct wiring are described below:

- Opening SELF SERVICE.
- Opening the rear cover of the controller.
- Closing the rear cover of the controller.
- Closing SELF SERVICE.

OPENING THE REAR COVER OF THE CONTROLLER

Loosen all 7 screws of the rear cover of the controller to access the compartment of the electronic boards.

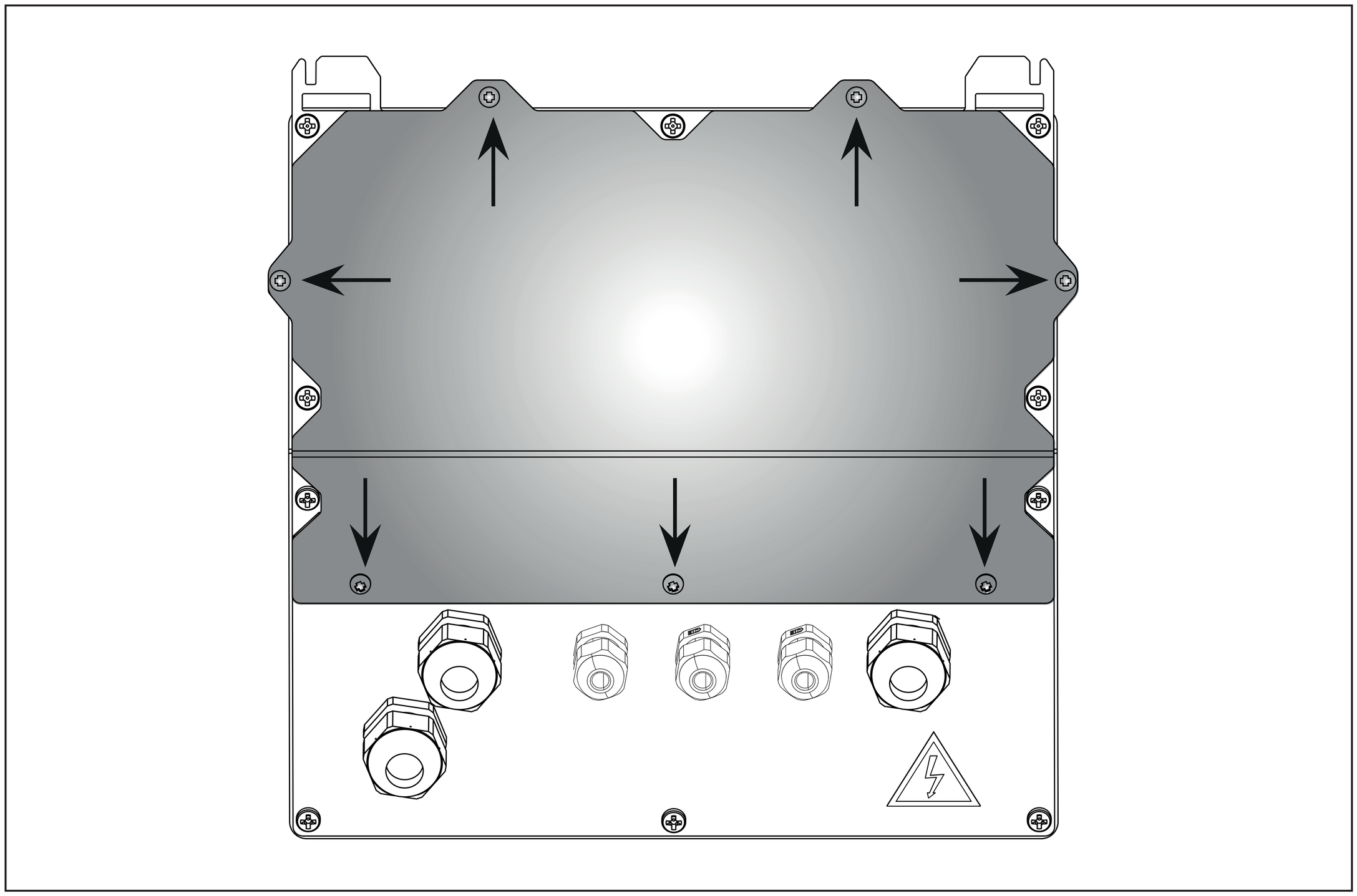

This manual is the property of PIUSI S.p.A. Whole or partial reproduction of this manual is forbidden.

CABLE GLAND CONNECTION

Cable gland connection: the cable glands to be used for the various signals are indicated in order to obtain an optimised cable route inside the controller. Pulser input and motor output are already wired.

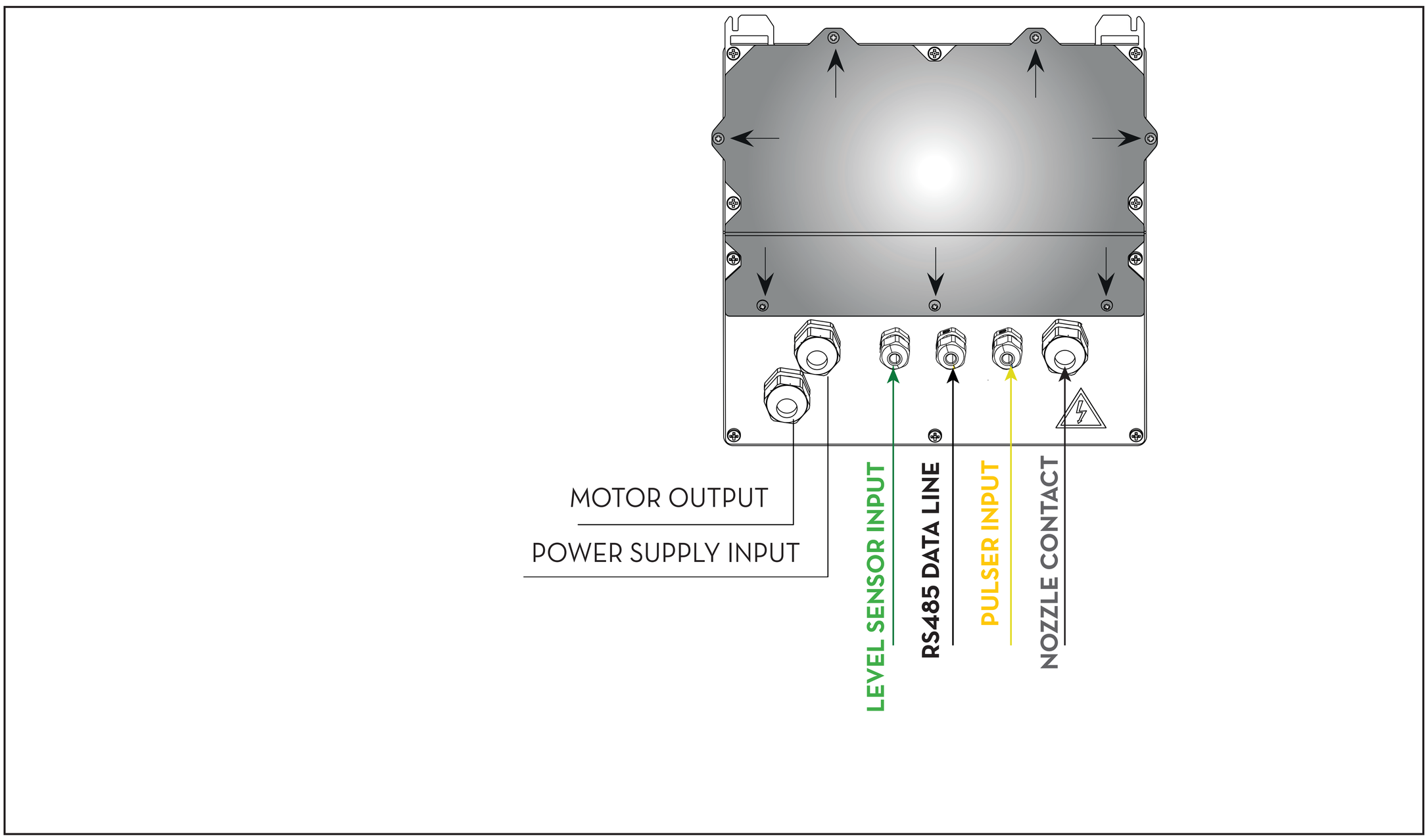

Once the cover has been opened, the electronic board and its connectors are accessible:

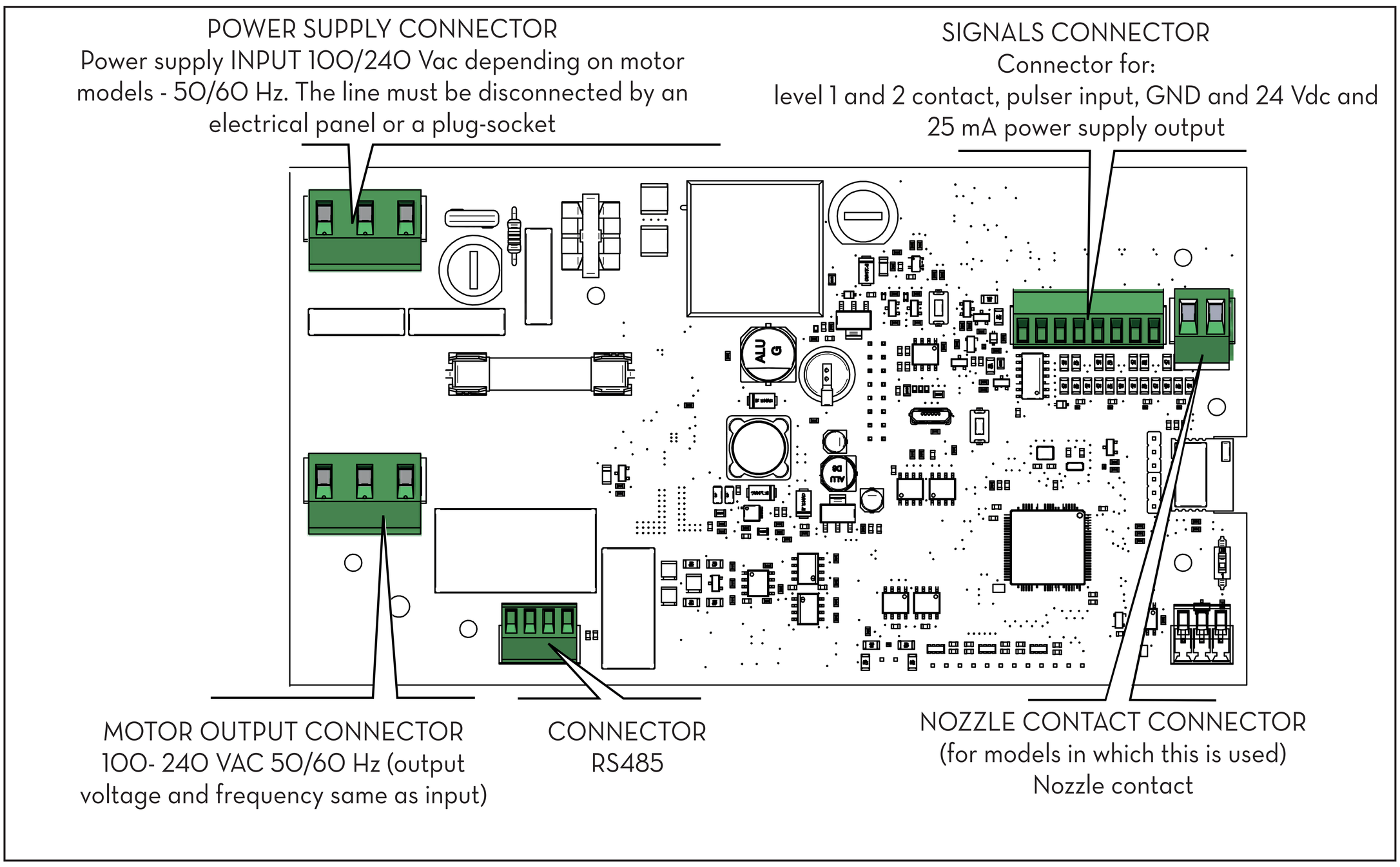

13.5.1 POWER SUPPLY CABLE

Insert the grounding wire (yellow/green sheath) into the central hole of the terminal, then phase and neutral respectively on the right and left and tighten the wire fixing screws.

Voltage values:
The electronic controller must be supplied with voltages and frequencies compatible with the motor to be driven:
- If the motor is 230 V ac at 50 Hz, the controller must be supplied at the same voltage and frequency (220 V ac – 240 V ac at 50 Hz).
- If the motor is 120 V ac at 60 Hz, the controller must be supplied at the same voltage and frequency (110 V ac – 130 V ac at 60 Hz).

CAUTION: the CABLE CROSS-SECTION must be chosen according to the electrical current absorbed by the motor, which is the device in which almost all the current flows.

Pay attention to the cable specifications:
- The signal cables and power cables used in this product must have an insulation rating of 300V or more.
- The power cable must have a cross section of AWG 16 or more.

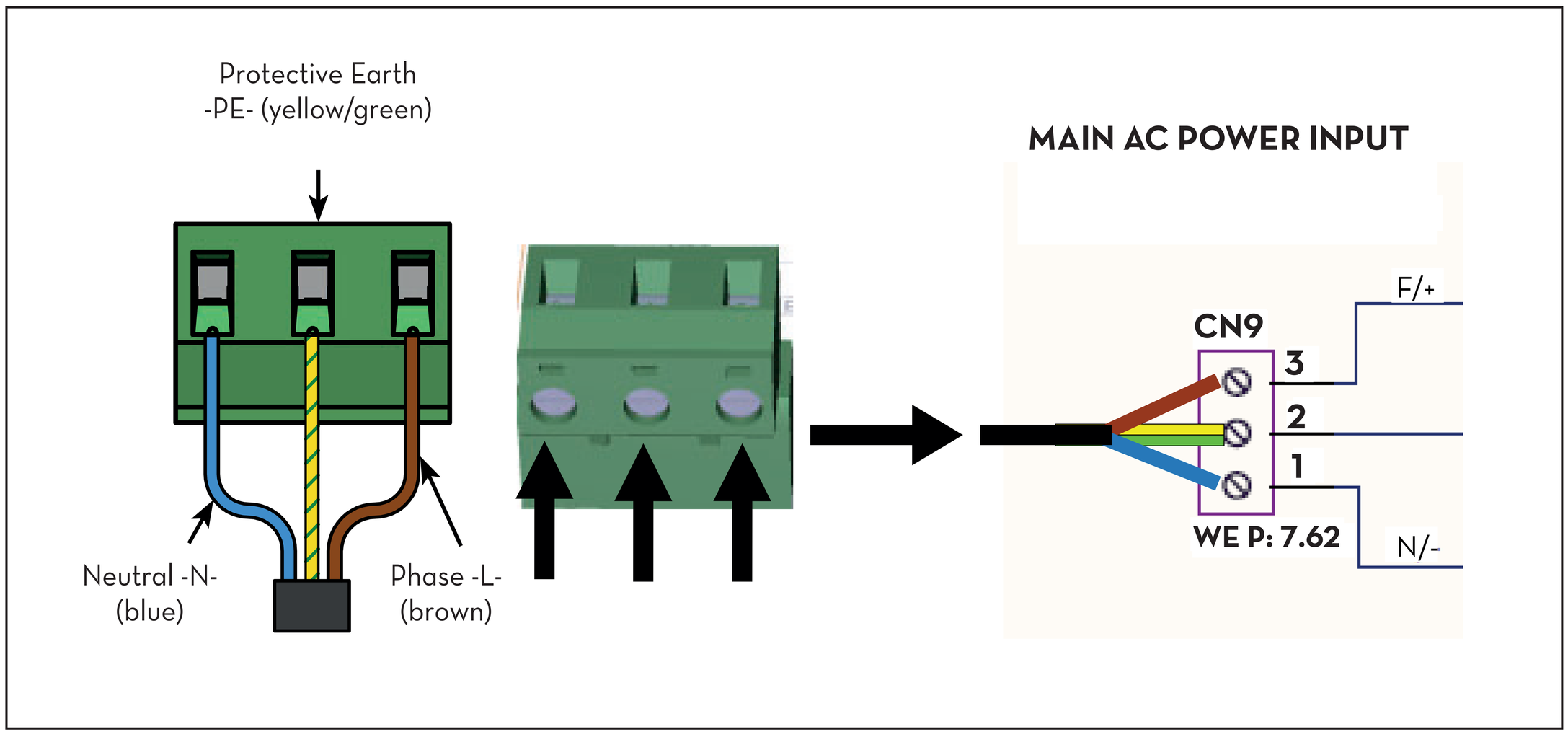

13.5.2 MOTOR CABLE

Insert the grounding wire (yellow/green sheath) into the central hole of the terminal, then phase and neutral respectively on the left and right and tighten the wire fixing screws.
On the motor terminal, when active, the voltage and frequency are the same as the input values from the power supply line.

CAUTION: The motor cable section must be selected based on the electrical current absorbed by the motor.

Pay attention to the cable specifications described previously.

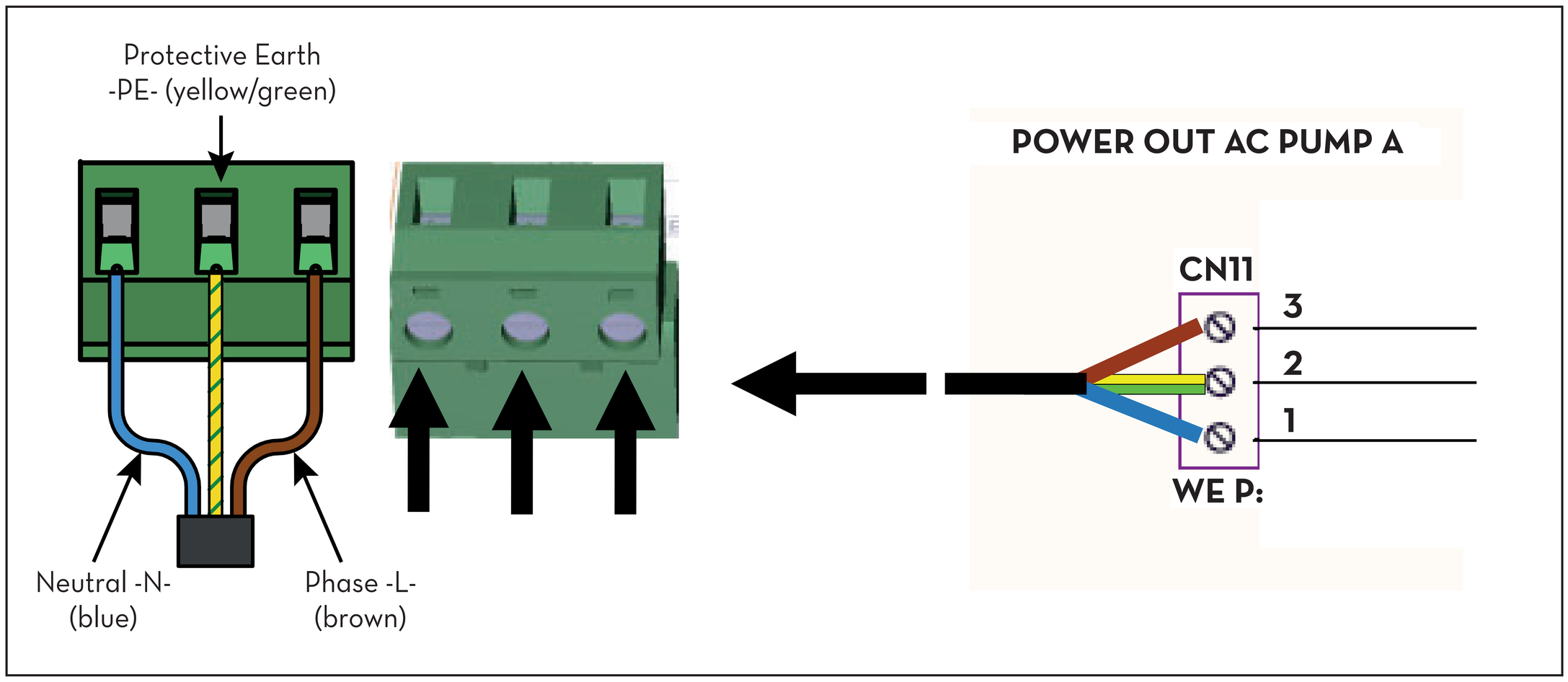

13.5.3 8 POSITION SIGNAL CONNECTOR

24 VD outlet (25mA max).
LITER COUNTER pulser input.
Level contact. Voltage-free input for the tank level alarm signal.

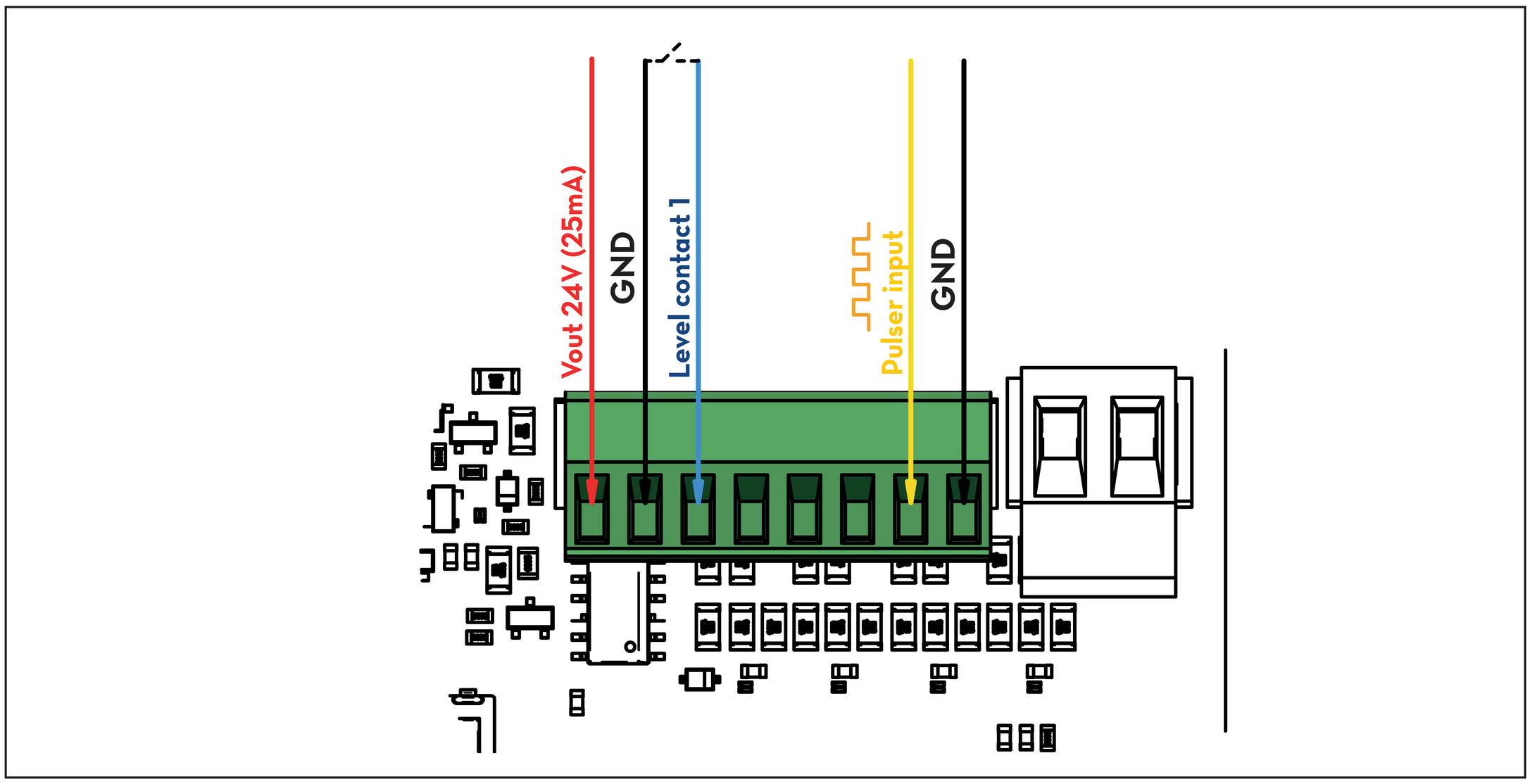

13.5.4 NOZZLE CONTACT

(For models in which this is used)
This contact turns the pump on when the nozzle is raised.

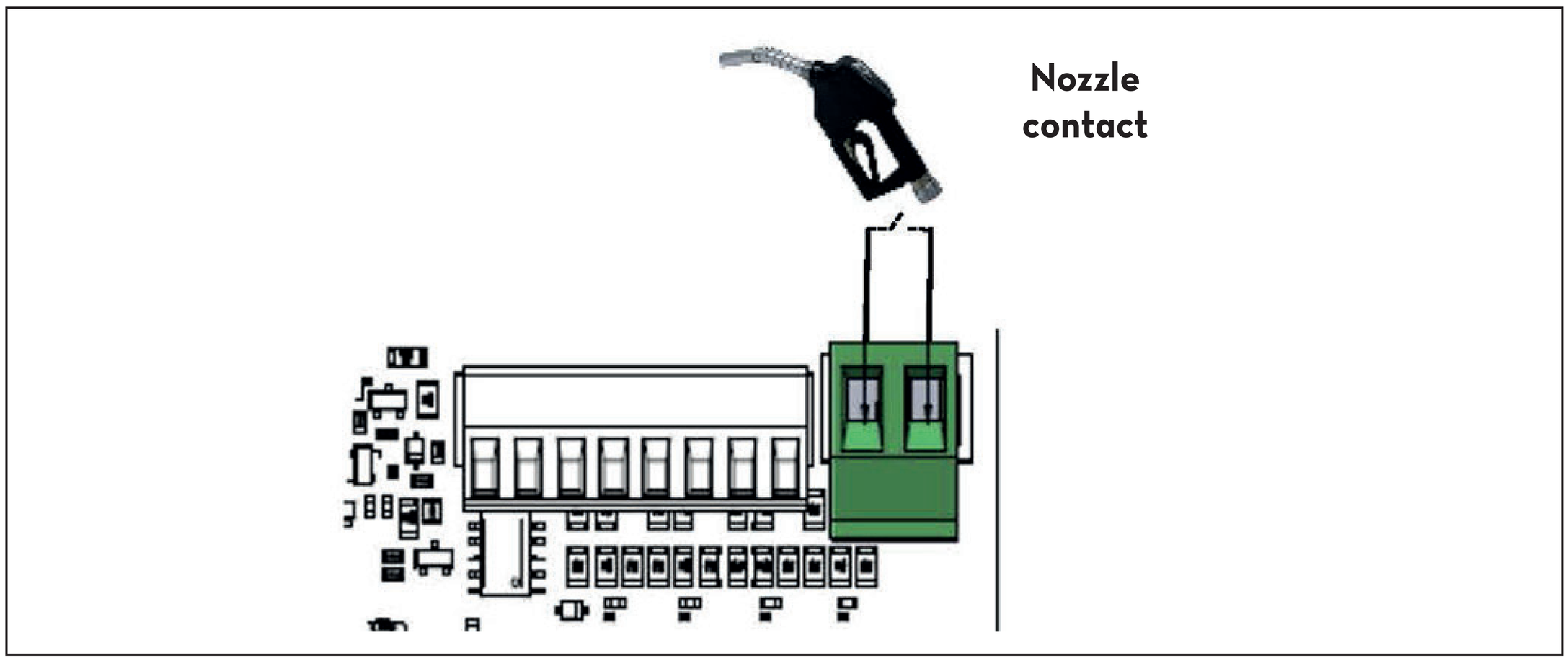

13.5.5 RS485 SERIAL DATA CONNECTION

The controller is equipped with a RS485 serial port for connection to a PC or remote printer via one of the various PIUSI PW adapters (PW-14-LAN-WiFi-Mobile).
Refer to the adapter's manual for the connection and configuration instructions.

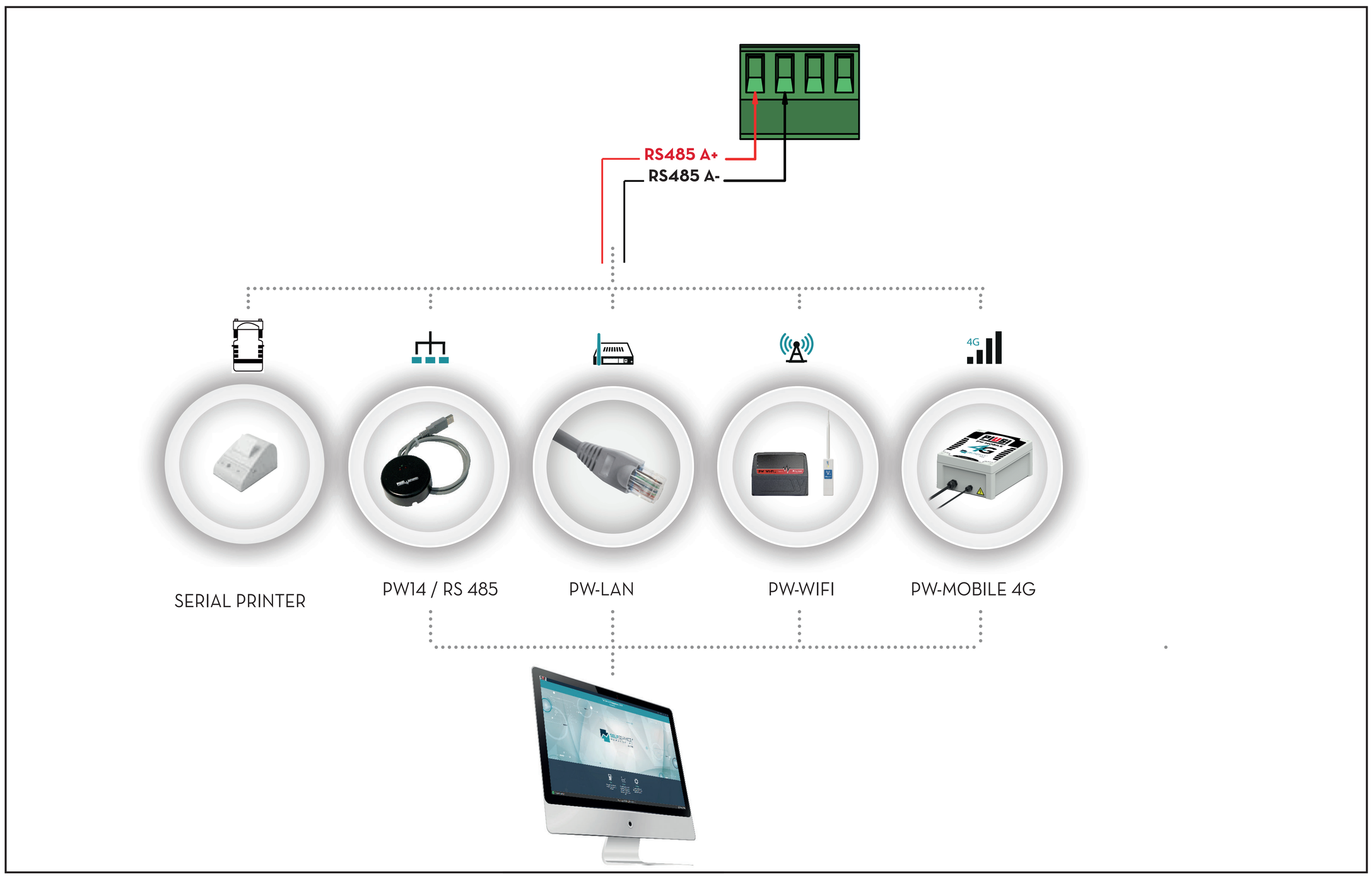

This manual is the property of PIUSI S.p.A. Whole or partial reproduction of this manual is forbidden.

14 GETTING TO KNOW SELF SERVICE AGILIS

14.1 OPERATING MODES

SELF SERVICE AGILIS has a variety of OPERATING MODES which start it automatically in response to given events.

14.1.1 SYSTEM MODE

In this mode, SELF SERVICE AGILIS runs access control and system management functions.
SELF SERVICE AGILIS automatically goes into SYSTEM mode as soon as a key is pressed, a key inserted or a transaction concluded. In this mode, SELF SERVICE AGILIS prompts for INPUT from the keypad and issues OUTPUT to the display or printer.

14.1.2 DISPENSING MODE

This is the mode in which the units dispenses fuel. The unit quits this mode when the the STOP key is pressed, a set amount of fuel has been dispensed, when the transaction timeout has expired, or when the nozzle contact is closed (depending on the configuration)

14.2 DISPLAYS

FOREWORD

Two separate backlit LCD displays provide information depending on the SELF SERVICE AGILIS's operating mode. The 2 displays feature an energy saving mode which turns off the backlighting after 2 minutes of inactivity. The backlighting turns on again as soon as a key is pressed or an i-Button key is scanned.

14.2.1 NUMERIC DISPLAY

(1 row of 4 digits)
- in SYSTEM mode, it displays the time.
- in DISPENSING model, it displays the dispensed amount.

14.2.2 ALPHANUMERIC DISPLAY

(2 rows of 16 alphanumeric characters)
- In SYSTEM mode, it displays prompts and/or data entries.
- In DISPENSING mode, it displays the unit of measurement and user data.

14.3 KEYPAD

The membrane keypad is used for entering data. It features:

- 10 alphanumeric keys;
- 8 special keys, as follows.

STOP	STOP stops the pump / quits any configuration menu.	∧ ∨	UP / DOWN for scrolling through menus
#	NUMBER used in combination with other keys for particular functions	< >	RIGHT / LEFT for selecting options (flashing)
ENTER	ENTER for confirming selections and entered values	**CANCEL**	CANCEL for deleting entries or returning to previous steps

14.4 SPECIAL KEY COMBINATIONS

# + 7	**Board Code 123456789**	**Circuit Board Code**
# + 8	**FW Release 1.2.3**	**Firmware Release**
# + 9	**Serial Number 87654321**	**Electronic Board Serial Number**

14.5 ELECTRONIC KEYS AND THE READER

FOREWORD
SELF SERVICE AGILIS controls access to the system with two types of ELECTRONIC KEYS.

MASTER KEY (RED)
This is assigned to the manager, and can also be used for transferring data to a PC, and is recognisable by its red keyring.

USER KEYS (YELLOW)
The manager assigns each user his own key, which is used only for dispensing fuel. These keys have an ID code which is automatically scanned when the user touches his key to the unit.

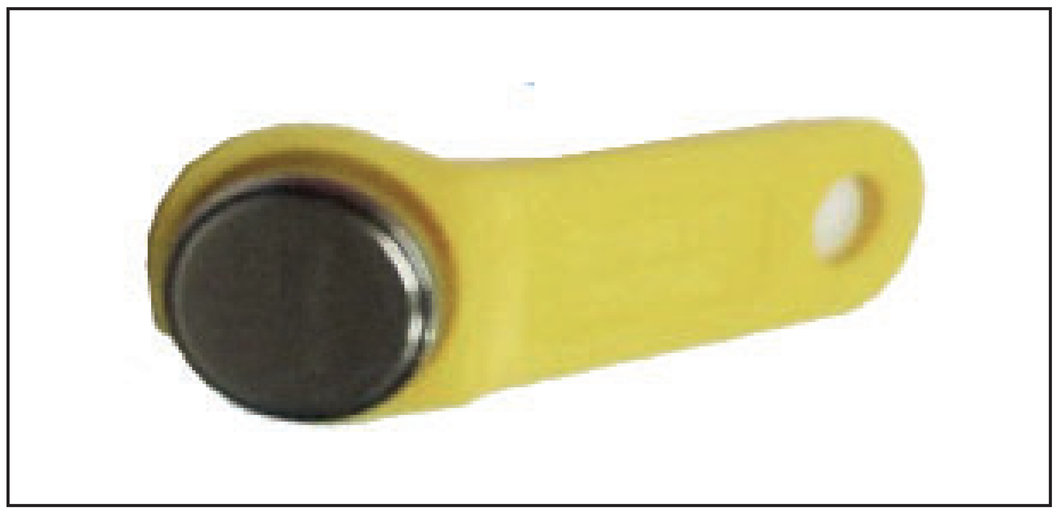

This manual is the property of PIUSI S.p.A. Whole or partial reproduction of this manual is forbidden.

The keys are read by AGILIS as soon as they are touched to the key reader on the unit's front panel

ALPHANUMERIC DISPLAY (Stand-by Mode)

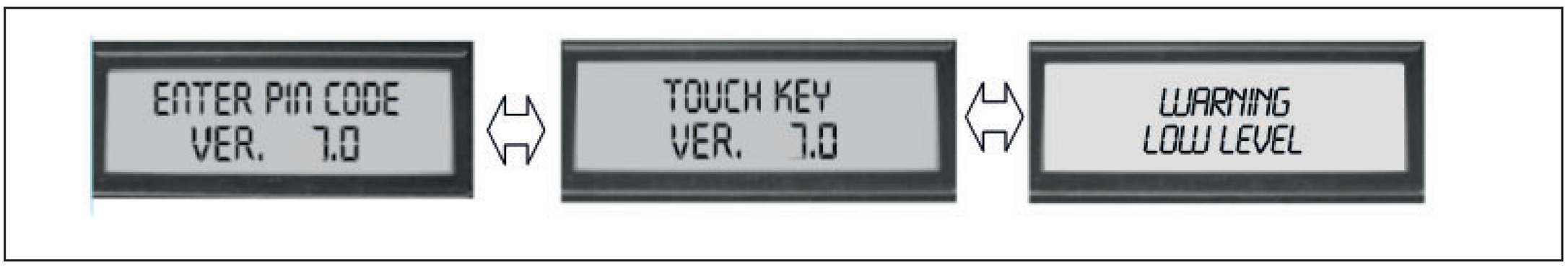

These messages display when AGILIS is waiting for a PIN CODE or for a KEY to be touched to the reader, or when there is an active level alarm.

15 USING SELF SERVICE

15.1 GENERAL INFORMATION

FOREWORD

To use AGILIS and its functions, you must be familiar with its SOFTWARE.

N.B.: the manager must be fully familiar with the software, since he will be using its functions, and we recommend that he read this manual in full.

The users need only be familiar with the dispensing functions.

15.2 REPRESENTATION OF THE SOFTWARE

All AGILIS software functions are described in detail in this manual, with reference to a graphic representation of the logical structure (FLOW CHART) of the messages shown on the LCD displays when it is being used. The messages on the displays (mostly the alphanumeric display) are connected by continuous arrows which represent possible keypad entries.

Pressing the keys moves the user from one step to the next and hence form one display message to the next one connected to it by an arrow.

Some connections between steps are not generated by key presses, but rather occur automatically when certain activities of variable duration are completed (for example, printing out a report); such activities are represented by a broken line and a clock symbol.

15.3 REPRESENTATIONS OF KEY PRESSES

SHORT KEY PRESS	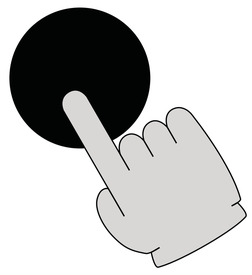	(press and release immediately)
DOUBLE KEY PRESS	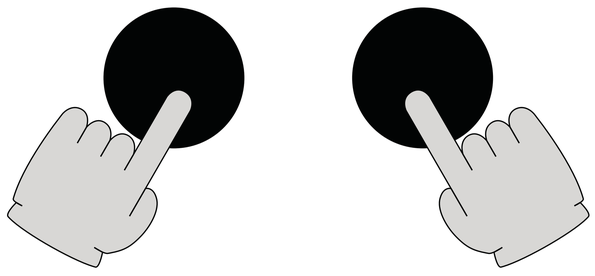	(hold down the first key and then press and release the second one)
TOUCH KEY	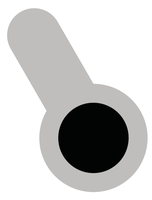	(touch the electronic key to the reader)
GENERIC REPRESENTATION OF THE ALPHANUMERIC DISPLAY (2 ROWS 16 CHARACTERS)	ABCDEFGHIL * # 002 PIN 5678	
MAIN ALPHANUMERIC DISPLAY MESSAGES	MASTER CODE 5678 FLASHING	ENTER PIN CODE INSERT KEY ALTERNATING FLASHING MESSAGES

EN

EXAMPLE FLOW CHART

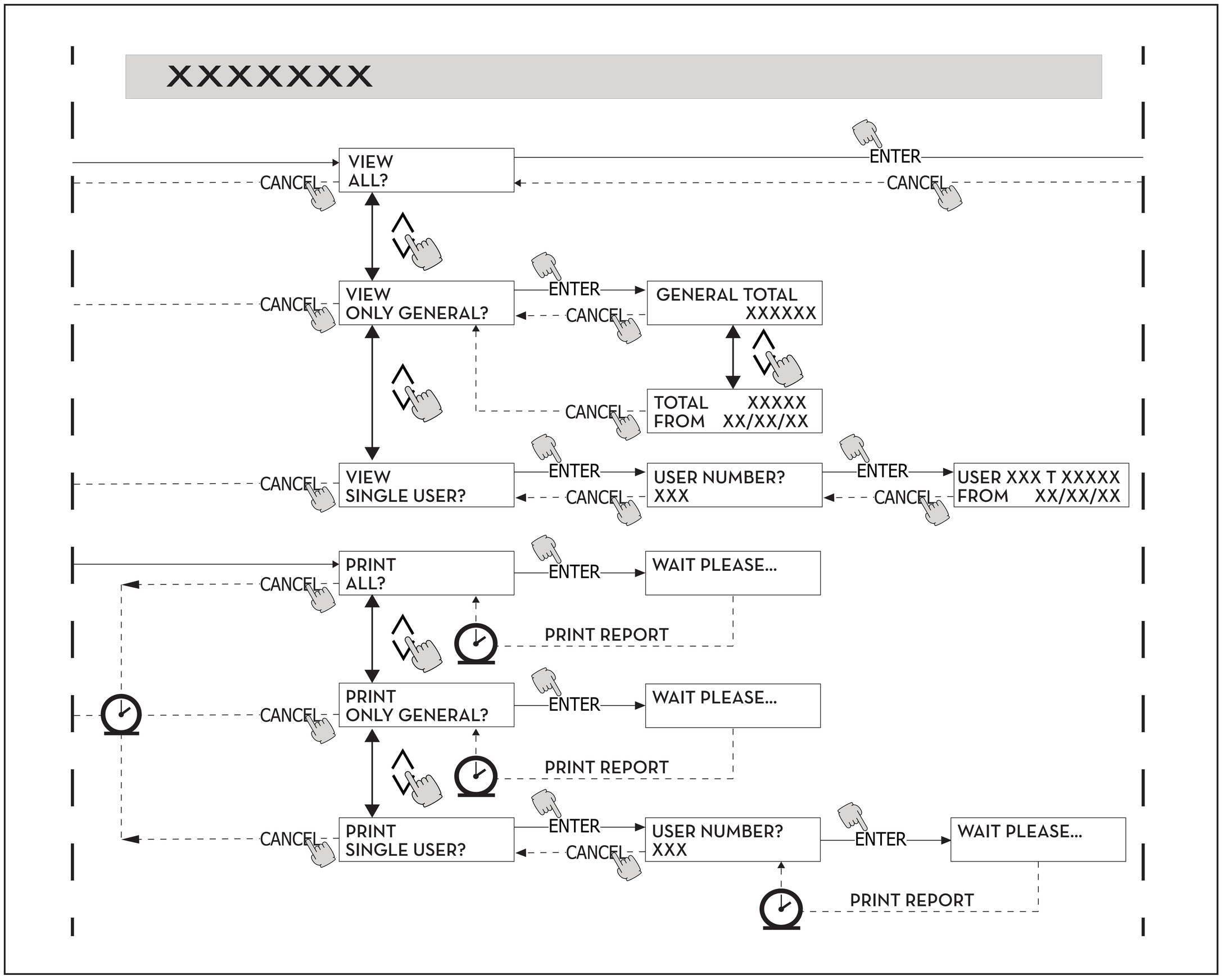

NOTE:

CANC KEY

To simplify the graphics in some FLOW CHARTS, the use of the CANC key is not always represented, even though it is almost always used in each step of the operation.

Pressing the CANC key always has one of the following effects:

- return to previous screen
- cancel a numeric input.

TIMEOUT

Throughout every step of an operation, if none of the provided actions are taken (key presses, key insertion, dispensing), the operation aborts after a given TIMEOUT. This ensures that the SELF SERVICE AGILIS does not stay in the manager input mode, since this would risk unauthorised users accessing such options. The TIMEOUT is not represented in the FLOW CHARTS.

STOP KEY

Pressing the STOP at any time to return to the start page “ENTER PIN CODE”/“TOUCH KEY”

16 SOFTWARE OVERVIEW

FOREWORD

The AGILIS software functions are divided into SECTIONS. Each section contains a set of similar operations. Access to each section may be automatic, free or protected by a pin code.
The SOFTWARE OVERVIEW illustrates the various sections and summarises the operations in each section.

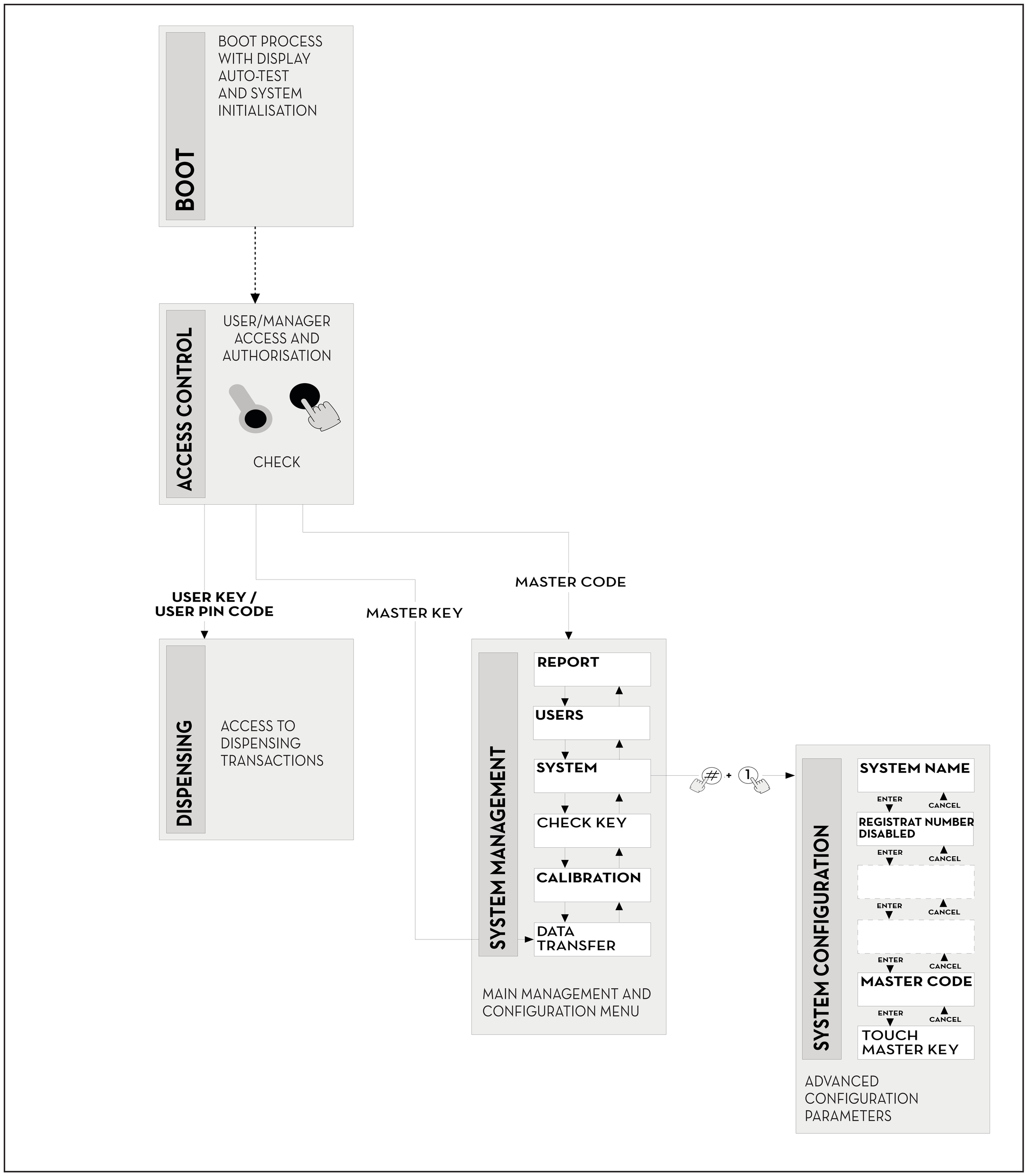

This manual is the property of PIUSI S.p.A. Whole or partial reproduction of this manual is forbidden.

BOOT SECTION
SELF SERVICE AGILIS runs a display autotest and displays the MODEL, SERIAL NUMBER and REV. FIRMWARE:
LAUNCHES: automatically when the device is turned on.
QUITS: automatically when the operation is completed.

SYSTEM MANAGEMENT SECTION
This contains the system management options (reports, user management, calibration, data downloads to the PC):
LAUNCHES: from ACCESS CONTROL, using a MANAGER KEY or SYSTEM code.
QUITS: when the operation is completed, following a timeout, or when the STOP key is pressed.

SYSTEM CONFIGURATION SECTION
This is used to customise AGILIS for the application and installation in question:
LAUNCHES: from the SYSTEM option in the SYSTEM MANAGEMENT menu, by pressing the combination #+1.
QUITS: when the operation is completed, following a timeout, or when the STOP key is pressed.

ACCESS CONTROL AND DISPENSING SECTION
Used to dispense fuel:
LAUNCHES: from ACCESS CONTROL, using a key or USER code.
QUITS: when the operation is completed, following a timeout, or when the STOP key is pressed.

Some sections run operations without user input (BOOT, ACCESS CONTROL). Others require user inputs (SYSTEM CONFIGURATION, DISPENSING).
These inputs must be made in a set sequence, and AGILIS will prompt for them when they are required.
The section quits automatically when the input sequence has terminated.
Other sections, more complex and articulated (SYSTEM MANAGEMENT), are organised with MENUS.
The user (the MANAGER, in this case) accesses the menus and selects the option of interest, which may itself consist of a SUBMENU. The individual sections are detailed in the following chapters.

16.1 BOOT

The BOOT section is an automatic TEST run by AGILIS. The section checks when the controller is powered on (with a master power switch installed by the system installer upline of the SELF SERVICE).

During the BOOT section, one can:
- check the operation of the displays, as they turn on and off again;
- check the unit's MODEL;
- check its SERIAL NUMBER;
- Check the FIRMWARE VER..

The SERIAL NUMBER displayed during the BOOT process is the S/N of the AGILIS board. This S/N is used to access the data collected by AGILIS if the user has lost the MASTER KEY and also forgotten the MASTER PIN CODE. If this happens, note down the controller S/N and then contact our SERVICE DEPARTMENT.

16.2 ACCESS CONTROL AND DISPENSING

FOREWORD
The system launches the ACCESS CONTROL section as soon as the boot section has completed. Access control is implemented in the following ways:

16.2.1 CODE CHECK

Press a NUMERIC key to start entering your PIN CODE:
AGILIS checks that the PIN CODE is a valid (authorised) one, and whether it is assigned to a USER or the MANAGER.
- INVALID CODE: AGILIS displays an unknown code message
- VALID CODE: If the system recognises the code, depending on its type:
  - if the code is a USER PIN CODE, it launches the DISPENSING section;
  - if it is a MASTER PIN CODE, it launches the REPORT section in the SYSTEM MANAGEMENT menu.

16.2.2 KEY CHECK

The user inserts his KEY into the KEY READER: AGILIS checks that the KEY is a valid (authorised) one, and whether it is assigned to a USER (yellow key) or to the MANAGER (red key).
INVALID KEY:
If it does not recognise the key, the system displays "UNKNOWN USER KEY".
VALID KEY:
If the system recognises the key, depending on its type:
- if it is a USER KEY, AGILIS launches the DISPENSING section;
- if it is a MASTER KEY, AGILIS launches the DATA TRANSFER section in the SYSTEM MANAGEMENT menu.

N.B.: since the MASTER KEY is most often used to download data from the SELF SERVICE to the PC (optional software required), the system automatically launches the DATA TRANSFER option when it recognises a MASTER KEY.

However, the user can access any other menu option from this menu by using the arrow keys.

The MANAGER PIN CODE and MASTER KEY are equivalent in the access they provide to the SYSTEM MANAGEMENT section, which is reserved exclusively for use by the MANAGER.

16.3 LEVEL ALARM MANAGEMENT

The SELF SERVICE can be connected to an external level alarm (voltage free contact). This connection is made directly to the AGILIS controller.
How AGILIS responds to a a level alarm depends on the system configuration.

16.3.1 CONFIGURATION 1

LOW LEVEL INPUT = NO
LOW LEVEL INPUT = ALARM
or
LOW LEVEL INPUT = PUMP CUT OUT
AGILIS does not handle the level input or take any action in response.

16.3.2 CONFIGURATION 2

LOW LEVEL INPUT= YES
LOW LEVEL INPUT= ALARM.
AGILIS prints the following message on the remote printer on completion of the dispensing transaction: "WARNING LOW LEVEL". IMPORTANT: AGILIS will continue to handle dispensing transactions even after this message has displayed. The message displays on the LCD display.

16.3.3 CONFIGURATION 3

LOW LEVEL INPUT= YES
LOW LEVEL INPUT = PUMP CUT OUT.
The display shows the message "ALARM/ LOW LEVEL INPUT", and AGILIS will no longer handle dispensing transactions.

This manual is the property of PIUSI S.p.A. Whole or partial reproduction of this manual is forbidden.

17 SYSTEM CONFIGURATION

FOREWORD

The SYSTEM CONFIGURATION section is used to configure the system for the application and installation in question. Only the MANAGER or installation technician can access the SYSTEM CONFIGURATION section, using the MASTER PIN CODE or MASTER KEY.
To access the configuration section:
1 - enter the SYSTEM MANAGEMENT menu
2 - scroll to the SYSTEM option
3 - press the key combination “#“ + “1”.

17.1 INSTALLATION CONFIGURATION

The system must be configured during the initial installation. Before configuring the system, the installation technician will discuss which options best suit the application with the manager.
Configuration consists in a set sequence of operations (selections and inputs). Each operation has a default setting, which can be modified or confirmed with the ENTER key (pressing ENTER moves to the next option in the sequence).
We detail the options for each step in the sequence below. The names of the paragraphs are the names shown on the display for the operation in question.
We now describe the various menus:

UNIT NAME

This is the name assigned to the SELF SERVICE AGILIS by the manager. Yo can also choose not to assign a name to the unit.
DEFAULT: nil.
Values: ALPHANUMERIC string up to 16 characters.

REGISTRATION NUMBER

This determines whether the user must enter the name or number of the vehicle being refuelled. If this option is selected, the user must enter a value for initiate a dispensing transaction (the system will accept any value).
DEFAULT value: DISABLED
Values: DISABLED (not required)
ENABLED (required)

ODOMETER (KILOMETERS)

This determines whether the user must enter the mileage of the vehicle being refuelled. If this option is selected, the user must enter a value for initiate a dispensing transaction (the system will accept any value).
DEFAULT value: DISABLED
Values: DISABLED (not required)
ENABLED (required)

START TIME OUT

This sets the time within which the user must start dispensing fuel, starting when the system enables the pump. If the time expires without the user starting to dispense fuel, the SELF SERVICE AGILIS disables the pump and the user must start the procedure again (using his code or key) to dispense fuel.
DEFAULT value: 60 sec
Values: 001 to 999 sec

FILLING TIME OUT

This sets the maximum time for which dispensing can be interrupted. After having started to dispense fuel,
- the user may interrupt it temporarily;
- dispensing may be interrupted automatically by the nozzle.

If dispensing is interrupted (with the pump on, but no fuel being dispensed) for longer than this setting, the pump is disabled and stops.
To resume dispensing, the user must start the procedure again (using his code or key) and start a new dispensing transaction.

If the user places the nozzle back into its holder before the interruption period times out, the dispensing transaction terminates (the pump is disabled).
DEFAULT value: 120 sec
Values: 001 to 999 sec

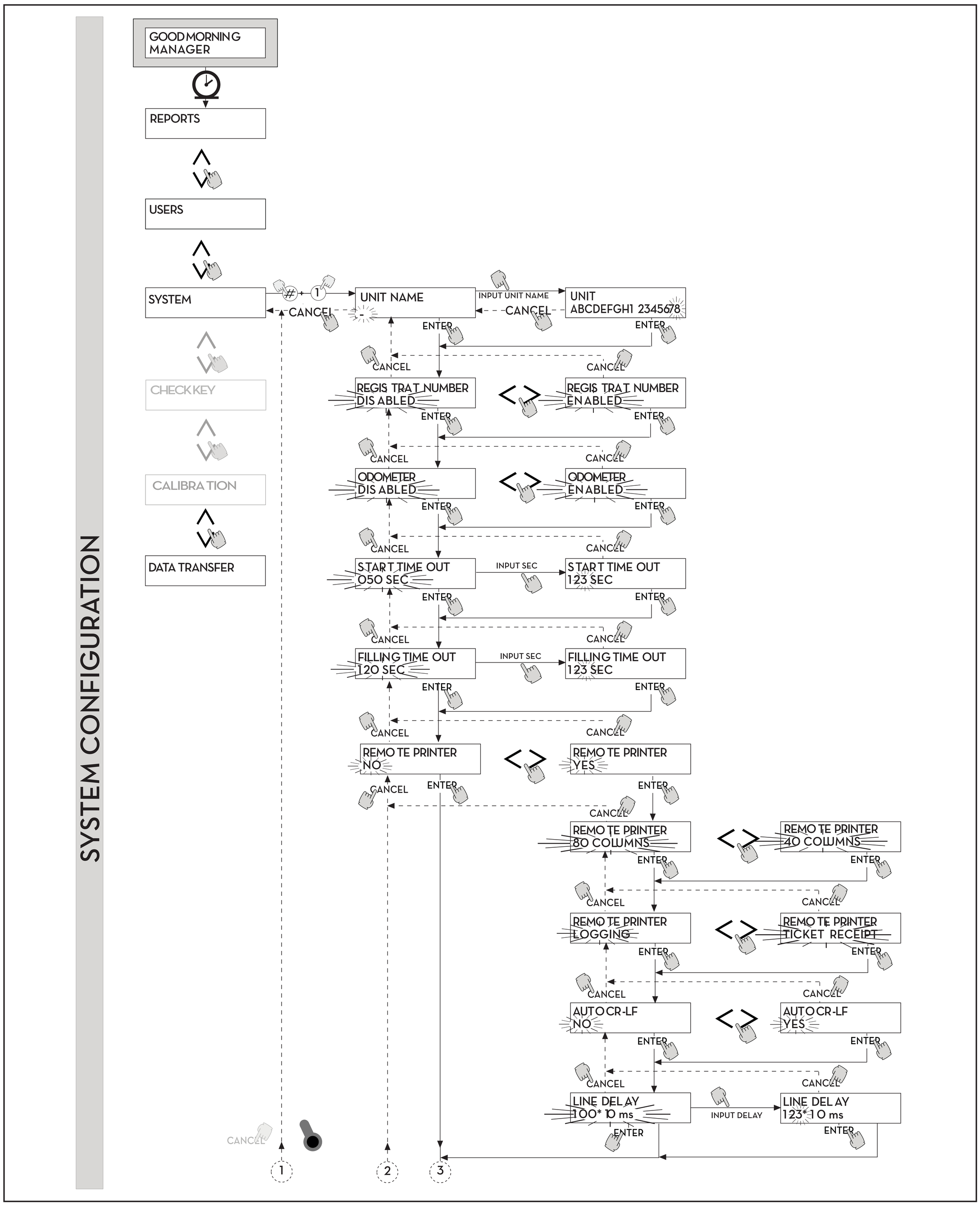

This manual is the property of PIUSI S.p.A. Whole or partial reproduction of this manual is forbidden.

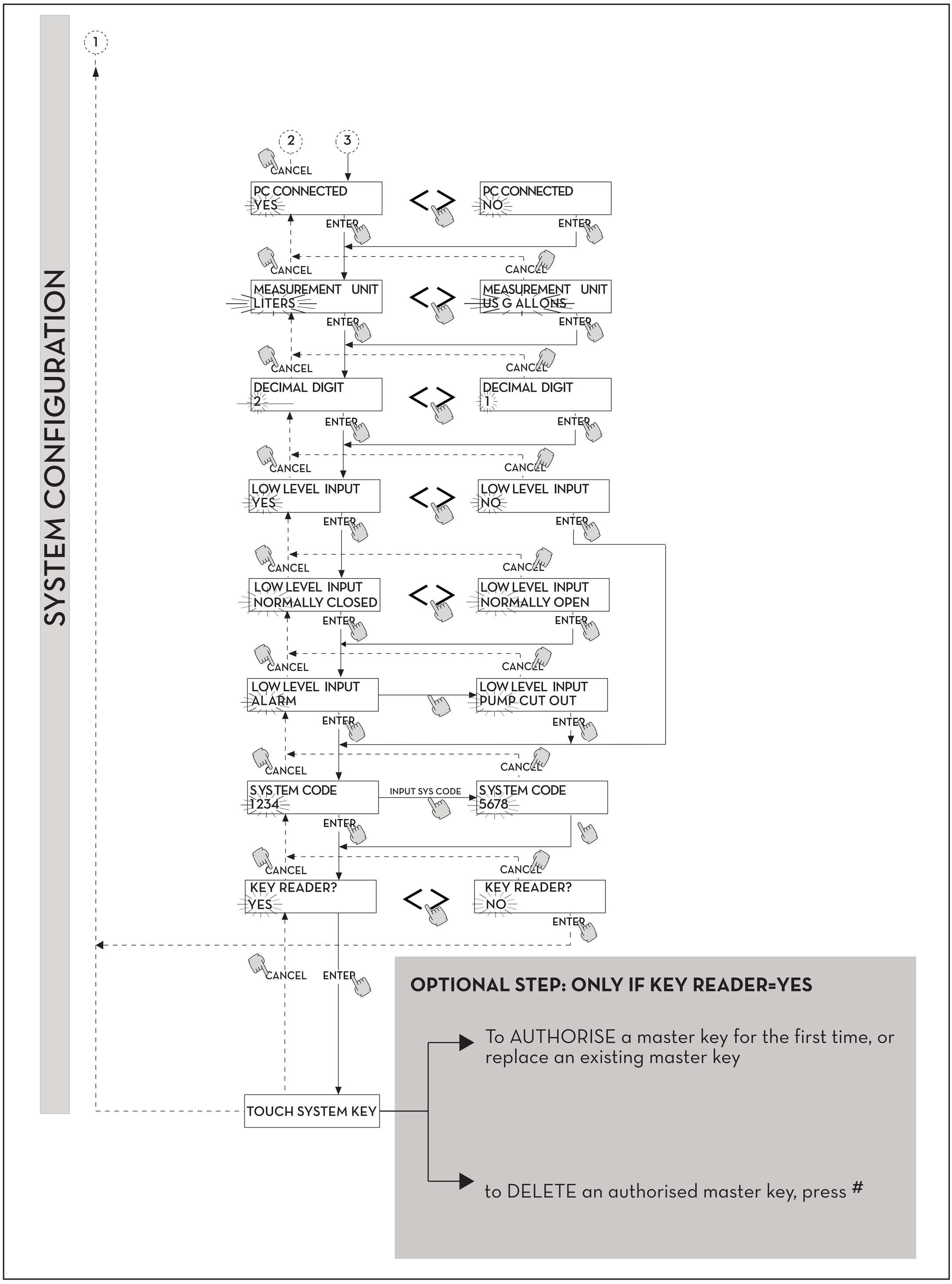
SYSTEM CONFIGURATION
1
2
3
CANCEL
PC CONNECTED YES
PC CONNECTED NO
ENTER
MEASUREMENT UNIT LITERS
MEASUREMENT UNIT US G ALLONS
DECIMAL DIGIT 2
DECIMAL DIGIT 1
LOW LEVEL INPUT YES
LOW LEVEL INPUT NO
LOW LEVEL INPUT NORMALLY CLOSED
LOW LEVEL INPUT NORMALLY OPEN
LOW LEVEL INPUT ALARM
LOW LEVEL INPUT PUMP CUT OUT
SYSTEM CODE 1234
INPUT SYS CODE
SYSTEM CODE 5678
KEY READER? YES
KEY READER? NO
TOUCH SYSTEM KEY
OPTIONAL STEP: ONLY IF KEY READER=YES
To AUTHORISE a master key for the first time, or replace an existing master key
to DELETE an authorised master key, press #

REMOTE PRINTER

This option determines whether a remote printer is connected to the SELF SERVICE with the optional RS 485 line (for instance an office, up to several hundred metres away) to enable a single report line to be printed out automatically for each transaction (logging) or to print out reports at the manager's request.

NOTE: The printer must be equipped with either:
- an RS 485 serial port;
- an RS 232 serial port + RS 232/485 adapter (available on request);
- a Centronics parallel port + RS 232/485 adapter + RS 232 /Centronics adapter (both available on request).

DEFAULT value: NO

Values: YES (printer connected)
NO (no printer connected)

REMOTE SERIAL PRINTER SETTINGS (if connected):

Protocol: 8 - N - 1
BAUD RATE: 2400
Word Length: 8 bit
Parity: None
Stop bit: 1

If you set the system to connect to a printer (value YES), the following functions may also display:

REMOTE PRINTER/TYPE

This determines what type of remote printer you wish to connect to the SELF SERVICE:
- standard 80 column office printer;
- 40 column printer (ticket printer with paper roll).

DEFAULT value: 80 COLUMNS

Values: 80 COLUMNS (80 column printer)
40 COLUMNS (40 column printer)

REMOTE PRINTER / PRINT OUT

This determines what kinds of print out are to be made with the remote printer:
- ticket (reproduction of a ticket for printing out with the remote printer)
- automatically print out a report line for each transaction (transaction logging)

DEFAULT value: LOGGING

Values: LOGGING
TICKET RECEIPT

REMOTE PRINTER/AUTO CR-LF

This option adapts AGILIS's printer commands to the printer in question, which may require a CR-LF (carriage return-linefeed) command to operate properly.

N.B.: we advise leaving the default setting when making the first printouts. If the printer does not end lines properly, change this setting in the configuration menu.

DEFAULT value: NO

Values: NO (do not send CR-LF)
YES (send CR-LF)

This manual is the property of PIUSI S.p.A. Whole or partial reproduction of this manual is forbidden.

REMOTE PRINTER/LINE DELAY
If the printer does not have enough memory to handle the print queue, you can change the line delay setting to make it possible for the printer to handle the queue without losing data

NOTE: We advise leaving the default setting when making the first printouts. If the printer does not receive all print data properly, change this setting in the configuration menu.

DEFAULT value: 100 x 10 ms
Values: 100-999 x 10 ms

PC CONNECTED (requires optional software)
This option determines whether to connect a PC with the optional AGILIS SELF SERVICE MANAGEMENT software installed on it to the SELF SERVICE with the RS 485 serial line, for collecting and processing transaction data (see the sheet for hooking up the included cables).

MEASUREMENT UNIT
This option sets the units used by the system.
- DEFAULT value: LITERS
- Values: LITERS
  US GALLONS

DECIMAL DIGIT
This option sets the number of decimal digits to which the amount of fuel dispensed is displayed. If you set 2 decimal digits, then if the dispensed amount exceeds 99.99 the system will only display one digit after the decimal point thereafter.
- DEFAULT value: 1
- Values: 1 - 2

LOW LEVEL INPUT = YES / NO
This option determines whether to handle the optional level contact:
- YES = the level contact is handled;
- NO = the level contact is not handled.

LOW LEVEL INPUT = NORMALLY OPEN / NORMALLY CLOSED
This option sets the type of contact.
- NORMALLY OPEN: Closes when an alarm is triggered.
- NORMALLY CLOSED: Opens when an alarm is triggered.

LOW LEVEL INPUT = ALARM / PUMP CUT OUT
This option only displays if LOW LEVEL INPUT = YES (see “LEVEL ALARM MANAGEMENT”). This option determines the system’s response when the level contact closes.
- If you choose ALARM, you can print out the alarm on a remote printer (if connected).
- If you choose “PUMP CUT OUT”, SELF SERVICE disables the pump and stops all refuelling transactions.

MASTER CODE
This option sets the MASTER CODE, which has a DEFAULT value of 1234. When the option opens, the system displays the currently valid code:
- press ENTER to confirm and go to the next option;
- press a numeric key to enter a new code.

N.B.: once you have entered the new code, press ENTER to confirm; SELF SERVICE AGILIS will now display the OLD code (OLD PIN) and the NEW code (NEW PIN):
- press ENTER to confirm the new code
- press CANCEL to cancel the modification and continue using the old code.

KEY READER
This option enables/disables the key reader on the SELF SERVICE AGILIS's front panel.
- DEFAULT value: YES
- Values: YES (reader enabled)
  NO (reader disabled)

TOUCH SYSTEM KEY
This option enables a new key as the MASTER KEY, to replace the existing one.
When the SELF SERVICE AGILIS displays this message, you can:
- quite SYSTEM CONFIGURATION by pressing CANCEL; the old MASTER KEY remains active;
- insert a new master-type key into the key reader to enable it as the new MASTER KEY, and replace the old one.

N.B.: only one key at a time can be the MASTER KEY for a given SELF SERVICE. However, you can set a single master-type key to be the MASTER KEY for multiple SELF SERVICE units.

TOUCH SYSTEM KEY
You can delete the MASTER KEY by pressing the # key in
the TOUCH SYSTEM KEY menu.
This means that there is no valid MASTER KEY, and the only way to access the manager functions is with the MASTER CODE.

NOTE: MODIFYING THE CONFIGURATION
Following the initial configuration, you may wish to change some of the selected options. Proceed as follows:
1. enter the CONFIGURATION menu;
2. confirm the options with ENTER (i.e. the ones you do NOT want to change) until you reach the option you wish to change;
3. scroll through the remaining operations to the end, confirming all options with ENTER until you reach the last one (NEW MASTER KEY);
4. quit the CONFIGURATION menu (if you don not wish to change the MASTER KEY) by pressing CANCEL.

This manual is the property of PIUSI S.p.A. Whole or partial reproduction of this manual is forbidden.

18 SYSTEM MANAGEMENT

FOREWORD

The SYSTEM MANAGEMENT section allows the manager to complete routine AGILIS system management tasks.
The SYSTEM MANAGEMENT section is divided into menus and submenus to enable quick access to the various options. The main menu has the six options described below

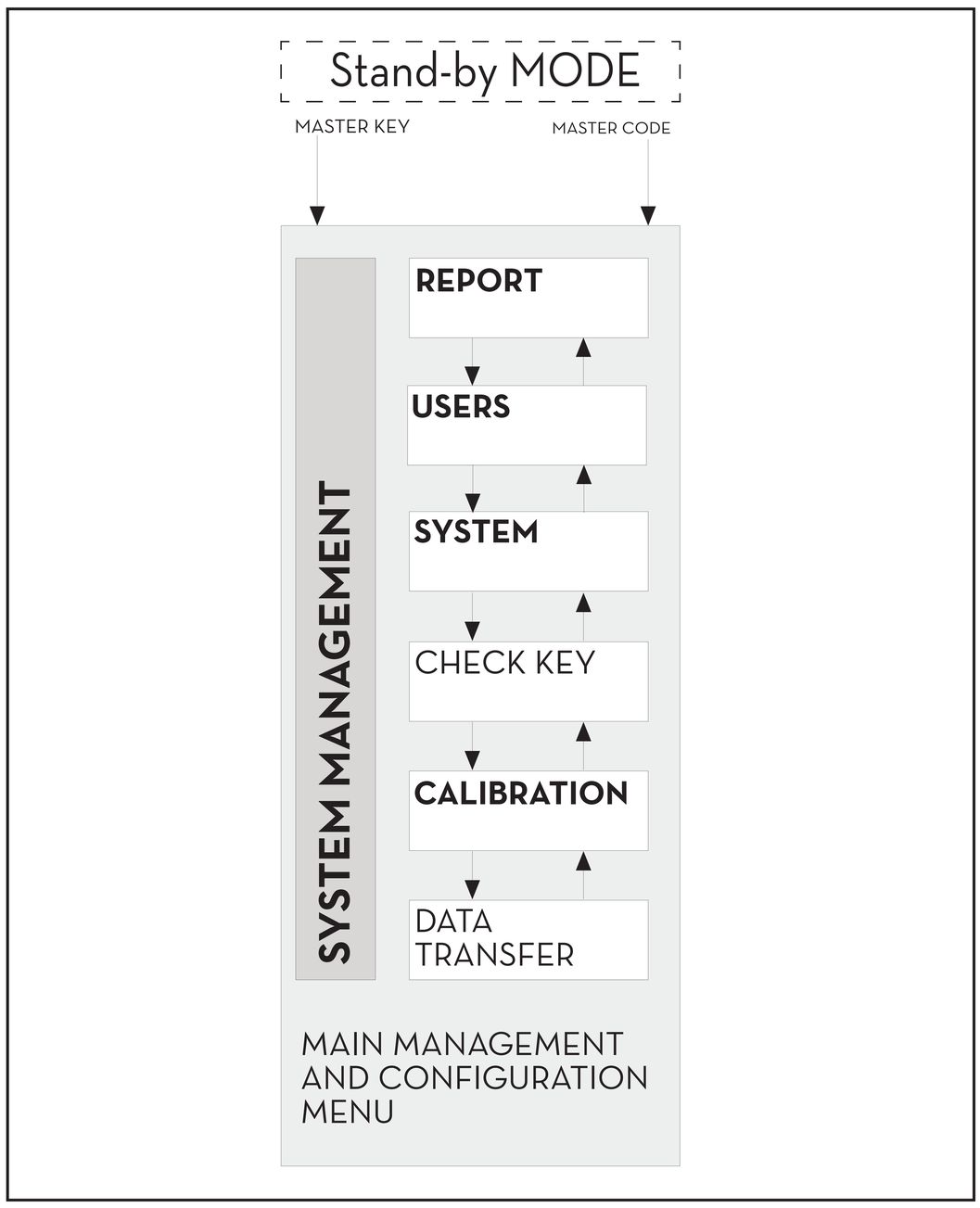

18.1 REPORT MENU

REPORT

Three types of report can be printed out on the remote printer (if available), which are accessed as shown in the following FLOW CHART

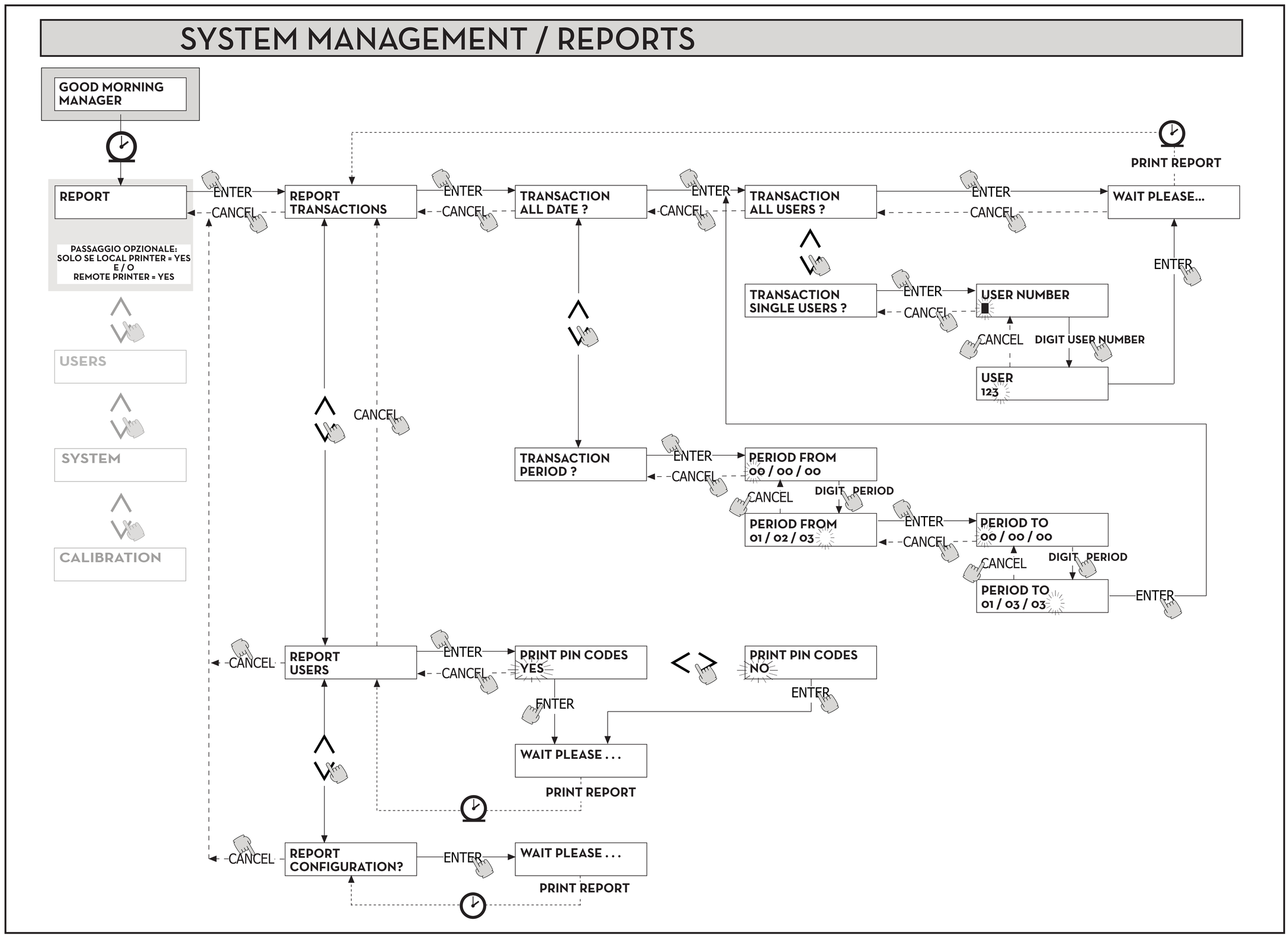

REPORT/TRANSACTION

This prints out all TRANSACTIONS in the AGILIS system memory on the remote printer (if available).

NOTE: AGILIS allows you to transfer the data from the SELF SERVICE to a PC (running the necessary optional software) in a variety of ways (RS85 serial line + optional adapters, or MASTER KEY).

N.B.: if you want to print out transaction lines, you must do so before you transfer the data to the PC.

Transferring the data from the SELF SERVICE AGILIS to the PC automatically deletes the controller's memory.

Transactions can be printed out as follows:

- in full, i.e. all transactions in memory (select: ALL DATE + ALL USERS);
- limited to a given period of time between two dates (select: PERIOD);
- limited to a single date (select: PERIOD, and enter the same date twice);
- limited to a single user (select: SINGLE USER) identified by his USER NUMBER (each user has a ID number).

The above limitations can also be applied in combination, so that you can print out all transactions for a single user over a given period of time, for instance.

SELF SERVICE 08:40:56 28-03-03
FM

TRANSACTION LIST

DATE : 28/03/03

TIME	USER	QUANTITY (LITER)	ODOMETER	REC.NUM
08:24	001	6.26		
08:37	005	4.09		
08:37	001	4.16		
08:38	001	3.11		
08:38	002	5.97		
08:38	004	2.92		
08:39	005	1.06		
08:39	003	3.06		
08:39	002	1.06		

REPORT / USERS

Prints out the list of authorised users. Two types of printout are available:

1. PRINT CODE > YES: generates a list including all user PIN CODES.
2. PRINT CODE > NO: generates a list without user PIN CODES.

N.B.: the printout including PIN CODES must be considered confidential, to avoid the secret PIN CODES being divulged to unauthorised persons.

The following are listed for each user:

- USER NUMBER.
- USER NAME.
- PIN CODE.
- USER KEY (if available).

If a given user has only a key, the USER KEY entry will display an asterisk "*" and the PIN CODE will read "OOOO". If on the other hand a given user has only a PIN CODE, it will be different form "OOOO", and there will not be an asterisk in the USER KEY column.

This manual is the property of PIUSI S.p.A. Whole or partial reproduction of this manual is forbidden.

```
SELF  SERVICE     08:40:46 28-03-03
        FM

        USERS  LIST
NUMBER     NAME            KEY
 001       MARIO            *
 002       JOHN
 003       PAOLO
 004       ROSSI
 005       SMITH            *
 006       HENRY
```

PRINT CODE - NO

```
SELF  SERVICE     08:40:46 28-03-03
        FM

        USERS  LIST
NUMBER     NAME            CODE KEY
 001       MARIO           0001  *
 002       JOHN            0002
 003       PAOLO           0003
 004       ROSSI           0004
 005       SMITH           0005  *
 006       HENRY           0006
```

PRINT CODE - YES

REPORT / CONFIGURATION

Prints out the options selected in the configuration procedure, as follows:

```
SELF  SERVICE     08:40:23 28-03-03
        FM

      UNIT CONFIGURATION
-----------------------------------
REG.NUMBER          DISABLED
ODOMETER            DISABLED
START TIME OUT      050 sec
FILLING TIME OUT    120 sec
INTERNAL PRINTER    YES
  TICKET RECEIPT    AUTO
REMOTE PRINTER      YES
  TYPE              40 COLUMNS
  PRINT OUT         TICKET REC
  AUTO CR-LF        NO
  LINE DELAY          10 *10 mSec
PRINT REPORT ON     BOTH PRINTERS
PC CONNECTION       NO
DISPENSING UNIT     LITERS
DECIMAL DIGIT       2
LOW LEVEL INPUT     ALARM
KEY READER          YES
OCIO PRESENT        YES
```

REPORT / TOTALS
Prints out the GENERAL TOTAL, period total (TOTAL FROM XX/XX/XX) and USER totals.

GENERAL TOTAL (NOT RESETTABLE).
The total amount of fuel dispensed since initial installation of the SELF SERVICE AGILIS. This total cannot be reset by the manager.

PERIOD TOTAL (RESETTABLE).
The total amount of fuel dispensed since the last reset. This is the sum of all USER totals.

USER TOTAL (RESETTABLE).
The total amount dispensed by a given user since the last time the period total was reset. An individual user total cannot be reset. All user totals are reset automatically when the period total is reset.
The TOTALS can be:
- Displayed - Printed out

These options are available in the submenus:
- TOTALS VIEW? displays the various totals (general, period and user) on the unit's displays;
- TOTALS PRINT? prints out the various totals (general, period and user);
- TOTALS RESET PERIOD? resets the period total and consequently also the individual user totals.

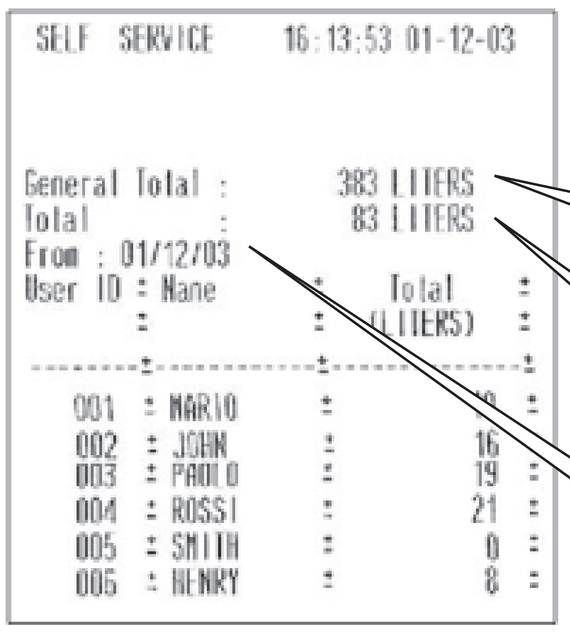

TOTALS -> PRINT -> ALL

GENERAL TOTAL

PERIOD TOTAL

LAST RESET DATE

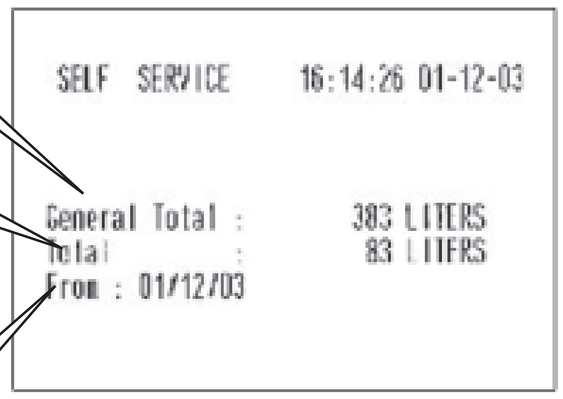

TOTALS -> PRINT -> ONLY GENERAL

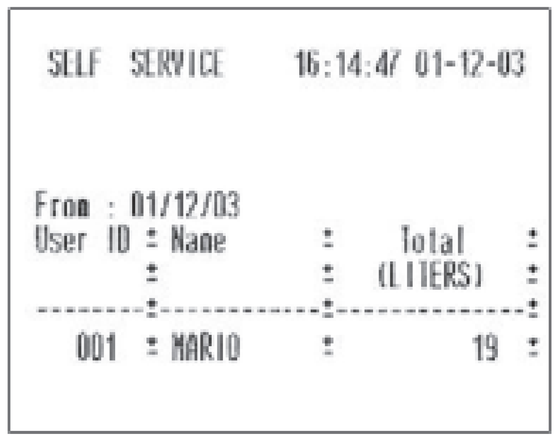

TOTALS -> PRINT -> SINGLE -> USER

We show the REPORTS/TOTALS flow chart below.

This manual is the property of PIUSI S.p.A. Whole or partial reproduction of this manual is forbidden.

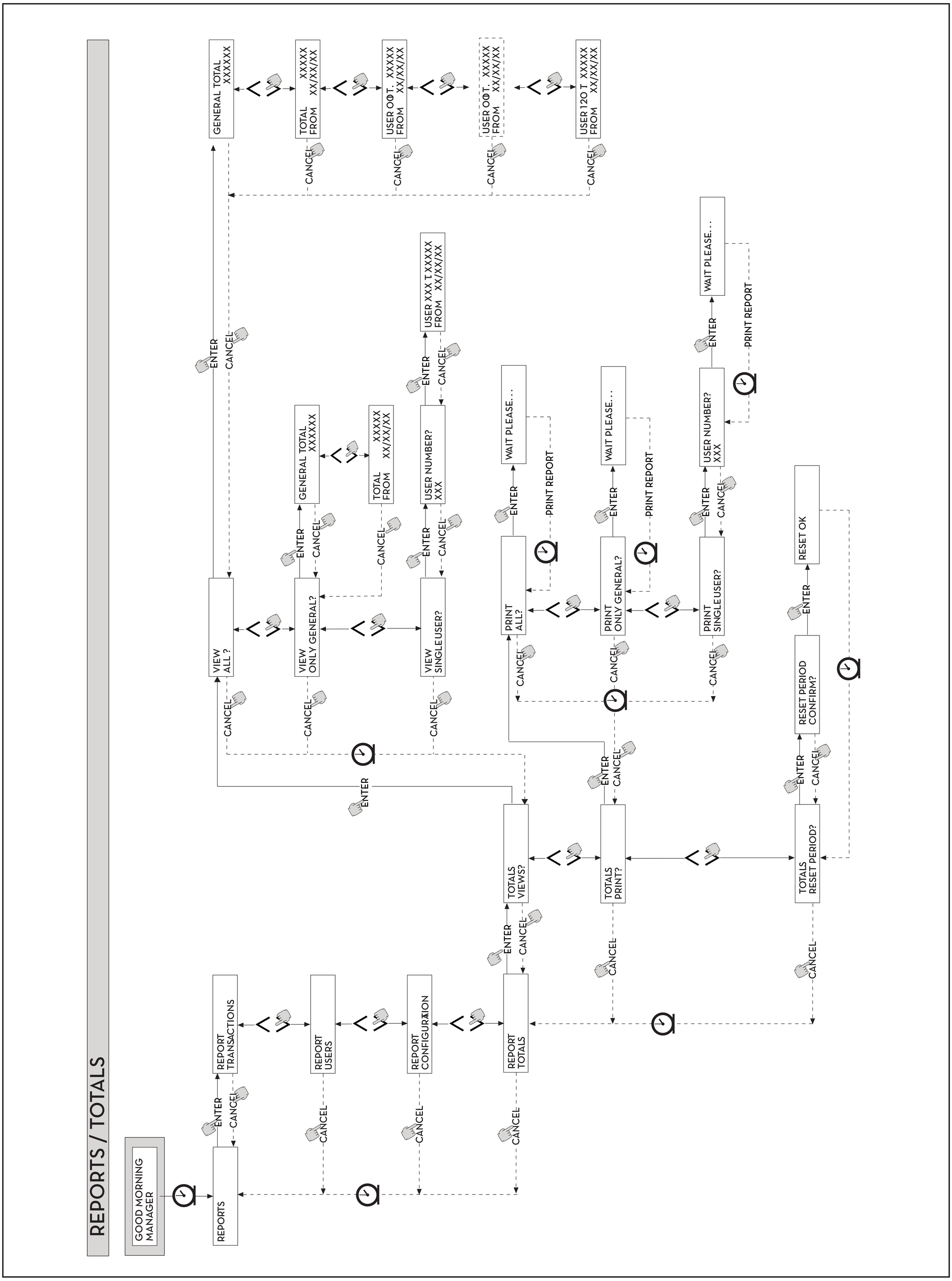
REPORTS / TOTALS
GOOD MORNING MANAGER
REPORTS
ENTER
CANCEL
REPORT TRANSACTIONS
REPORT USERS
REPORT CONFIGURATION
REPORT TOTALS
VIEW ALL ?
VIEW ONLY GENERAL?
VIEW SINGLE USER?
GENERAL TOTAL XXXXXX
TOTAL FROM XX/XX/XX XXXXX
USER NUMBER? XXX
USER XXX T XXXXX FROM XX/XX/XX
USER 0Ø T. XXXXX FROM XX/XX/XX
USER 12O T XXXXX FROM XX/XX/XX
TOTALS VIEWS?
TOTALS PRINT?
TOTALS RESET PERIOD?
PRINT ALL?
PRINT ONLY GENERAL?
PRINT SINGLE USER?
WAIT PLEASE...
PRINT REPORT
RESET PERIOD CONFIRM?
RESET OK

18.2 MENU USERS

FOREWORD
Used to manage the users authorised to use the SELF SERVICE with 4 options in a single submenu.

NOTE: if no users are authorised, only the user creation option (USER/ADD) is available.

USERS/ADD
Creates new users (ADD) as shown in the following flow chart.
Creating a new user requires a set sequence of entries and selections

USER / NAME
The name of the user, consisting of 1 to 10 alphanumeric characters. OBLIGATORY INPUT

USER / PIN
The pin code for each user.
You are prompted USER PIN > YES / NO.

- USER PIN -> NO: the user is not given a pin code, but only the electronic key, and the system prompts for you to insert the key (see "ELECTRONIC KEY").
- USER PIN -> YES: enter the user's pin code (a 1- to 4-digit number).

N.B.: you must always enter all 4 digits at this point. For instance, if you want to assign a user the pin code "4", you must enter "0004". The user need only enter the code "4" to complete a filling transaction.

If you enter a USER PIN already belonging to another user, SELF SERVICE AGILIS will refuse it and ask you to enter a new code.

ELECTRONIC KEY
You are prompted ELECTRONIC KEY > YES / NO.
ELECTRONIC KEY > YES: the system will display "TOUCH USER KEY" to prompt you to touch the key to the reader, and assign it to the user. The system will quit this step only when you touch a key to the reader, after which it prompts you to enter the 4-digit code affixed to the key itself. If the key in question has already been assigned to another user of the same SELF SERVICE AGILIS, the system will refuse it and display the message "WARNING KEY ALREADY ASSIGNED".

N.B.: you may only assign USER KEY type keys to users. You cannot assign a MASTER KEY in this procedure.

USER/NUMBER
A progressive number, from 1 to 250, assigned to each user.

N.B.: in contrast with the PIN CODE, the USER NUMBER is not confidential since it is no more than a number assigned to the user to facilitate user management activities (transaction printouts) for the manager.

You are prompted USER NUMBER > AUTO (NNN) / MANUAL.

- If you select USER NUMBER > AUTO (NNN), the user will be automatically given the displayed number (NNN), which is the lowest available number at that time, i.e. not yet assigned to a user.
- If you select USER NUMBER > MANUAL, you can enter any sill unassigned USER NUMBER.
- If you enter a USER NUMBER already belonging to another user, SELF SERVICE will refuse it and ask you to enter a new one.

This manual is the property of PIUSI S.p.A. Whole or partial reproduction of this manual is forbidden.

Once you have confirmed the automatic or manual option by pressing ENTER, the system will display all the new user's data for a few seconds, and then return to the USER / ADD menu.

N.B.: the system does not allow you to modify user data partially. If the data assigned to the new user are incorrect, you must:
- cancel the new user (see par. USERS/DELETE);
- re-enter the user with the correct data.

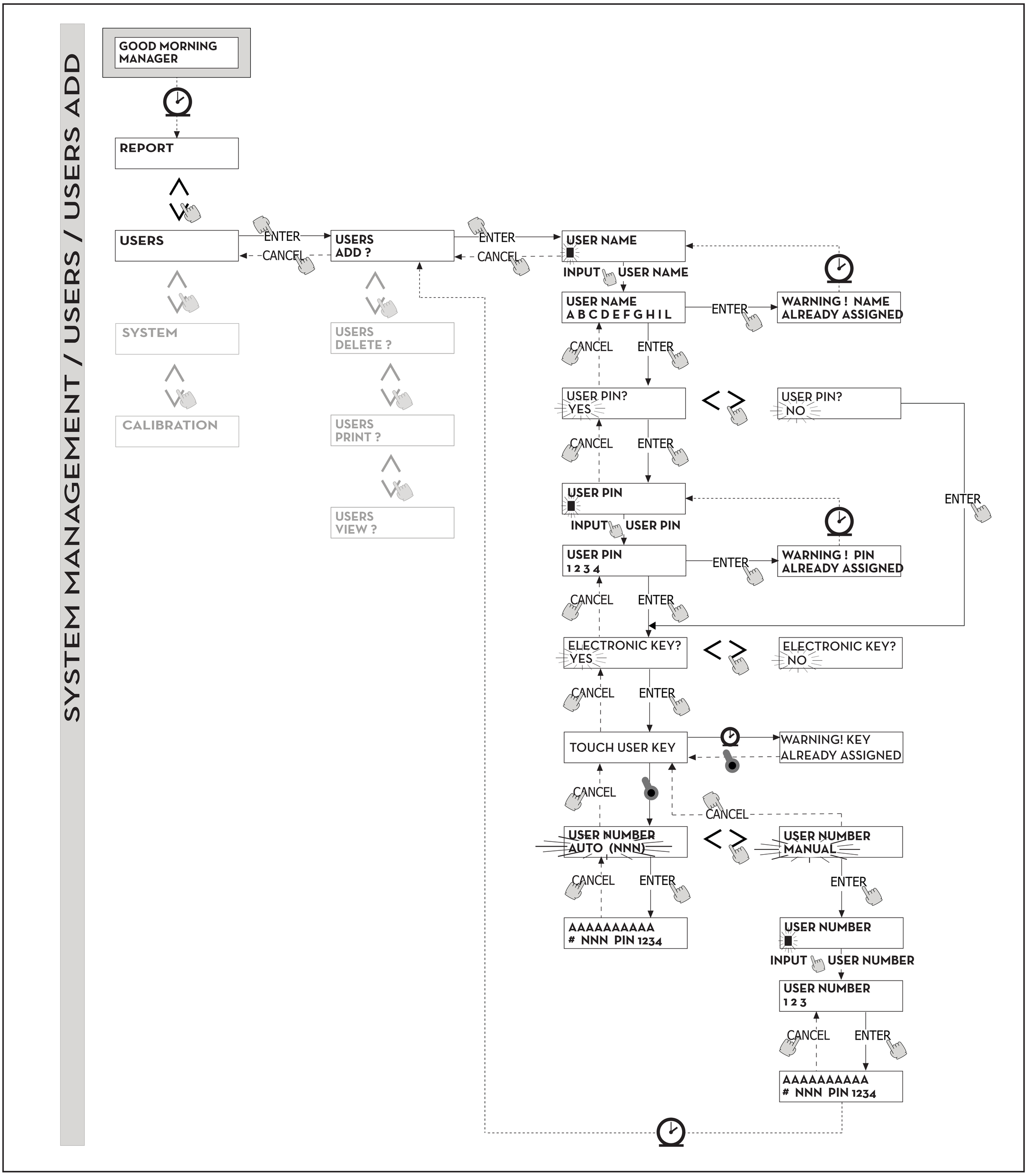

USERS/DELETE

Deletes authorised users (DELETE) as shown in the following flow chart. To select a user for deletion, enter his USER NUMBER.
The system will display all the selected user's data and prompt you to confirm that you want to cancel him.

N.B.: you cannot restore a cancelled user in any other way than by creating a new user with his data.
Cancelling a user:
- prevents him from dispensing fuel with his PIN CODE or USER KEY;
- makes the USER NUMBER assigned to him available;
- makes his electronic key unusable until it is assigned to another user.

USERS / PRINT

Prints out the list of authorised users. The options and respective printouts are the same as those given under "REPORT MENU".

USERS / VIEW

Displays all authorised users. The following display for each user:
- USER NUMBER.
- USER NAME.
- PIN CODE.
- KEY (if available).

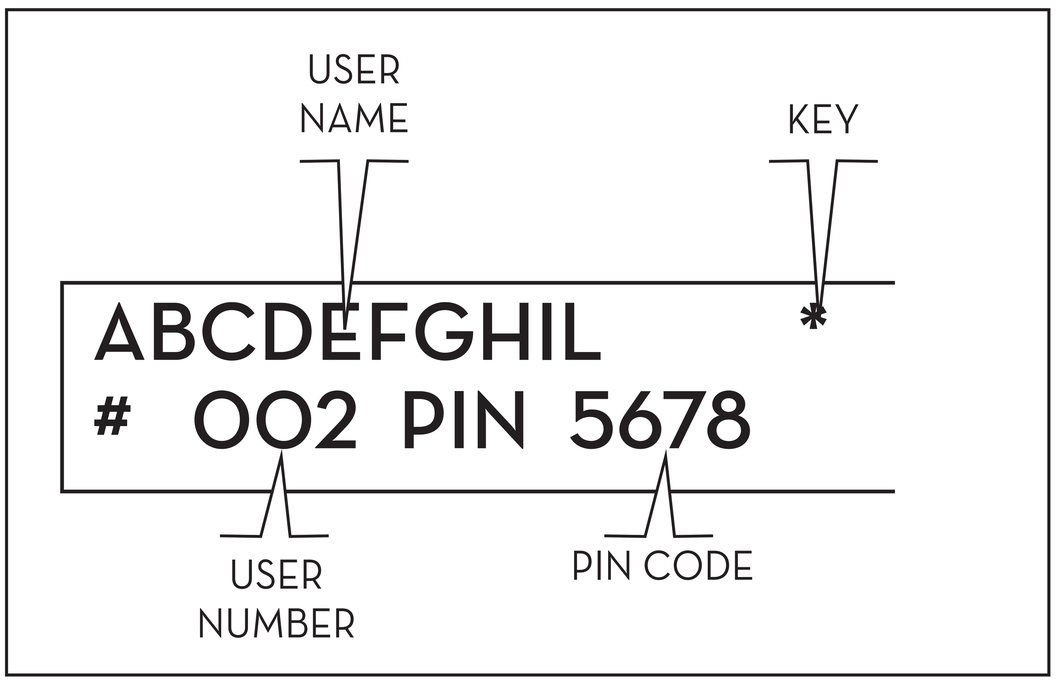

This manual is the property of PIUSI S.p.A. Whole or partial reproduction of this manual is forbidden.

SYSTEM MANAGEMENT / USERS / DELETE, PRINT, VIEW

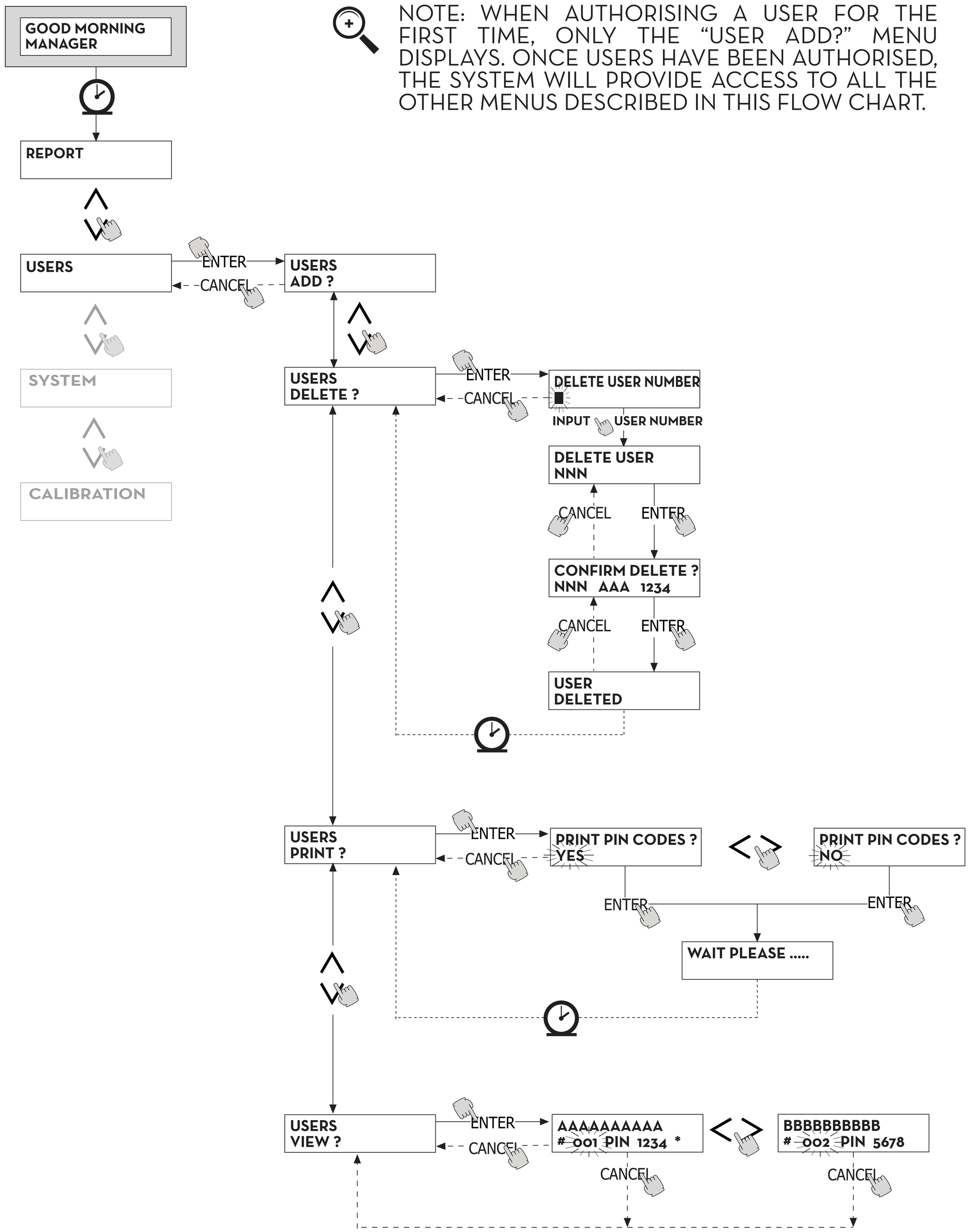

NOTE: WHEN AUTHORISING A USER FOR THE FIRST TIME, ONLY THE "USER ADD?" MENU DISPLAYS. ONCE USERS HAVE BEEN AUTHORISED, THE SYSTEM WILL PROVIDE ACCESS TO ALL THE OTHER MENUS DESCRIBED IN THIS FLOW CHART.

18.3 SYSTEM MENU

FOREWORD

Accesses the SYSTEM CONFIGURATION options (typical of the initial installation procedure) as described in par. 15, as well as a submenu with the following 5 options:

SYSTEM / SERIAL NUMBER

Displays the AGILIS controller board's SERIAL NUMBER.

N.B.: this is the SERIAL NUMBER of the controller board and NOT that of the unit as a whole, which is given on the NAMEPLATE on the unit's housing.

The AGILIS board's s/n can be displayed in two other ways, which do NOT require the MASTER CODE or MASTER KEY:

1. Turn the unit off and on again with its master power switch; the s/n displays for a few seconds during the BOOT process.
2. From the ACCESS CONTROL section:
   - press the key combination "# + 9"; the system will display the s/n.

SYSTEM / MEMORY

Accesses a submenu with the two following options for managing the internal memory of the AGILIS controller.

SYSTEM / MEMORY / VIEW

Displays how many memory locations are already used out of the the total available (255). Used memory locations become free again in the following cases:

- the data stored in the AGILIS memory has been transferred to the MASTER KEY, for downloading to the PC with the optional software. This is done by the manager at his discretion.
- the data in the AGILIS unit's internal memory is downloaded to the PC via RS485. This happens automatically every few tens of seconds (on condition that the necessary software is running on the PC)

N.B.: transaction printouts are not considered data transfers, and hence do not free up the used memory locations.

If neither of the above occur, the memory will fill up completely (SELF SERVICE AGILIS displays: USED MEMORY 255/255). When this happens, the SELF SERVICE AGILIS will no longer accept new transactions, and displays the message "FULL MEMORY ".
This situation must be remedied by the Manager, as follows:

- by downloading the data to the MASTER KEY;
- by restoring the RS 485 connection to the PC;
- by forcibly cleaning out the used memory locations with the MEMORY RESET option.

CAUTION: once the transactions have been deleted from the internal memory with a MEMORY RESET, they are permanently lost and cannot be recovered by the manager.

SYSTEM / MEMORY / RESET

Makes the used memory locations available again for logging new filling transactions. This option can also be used when the memory is completely full.

N.B.: if the manager runs a MEMORY RESET, the deleted transactions will no longer be available for printing out or transferring to another device. The MEMORY RESET option is thus for use only when absolutely necessary, and should be preceded by printing out all the saved transactions before deleting them irreversibly.

This manual is the property of PIUSI S.p.A. Whole or partial reproduction of this manual is forbidden.

SYSTEM / DATA / TIME

Sets the system date and time, for logging with the transactions.

N.B.: the system has a perpetual calendar which automatically changes the year and also accounts for leap years.
The calendar does NOT change between summer and winter time.

SYSTEM / LANGUAGE

The Language Menu selects the interface language out of those available in the controller.
We show the SYSTEM flow chart below.

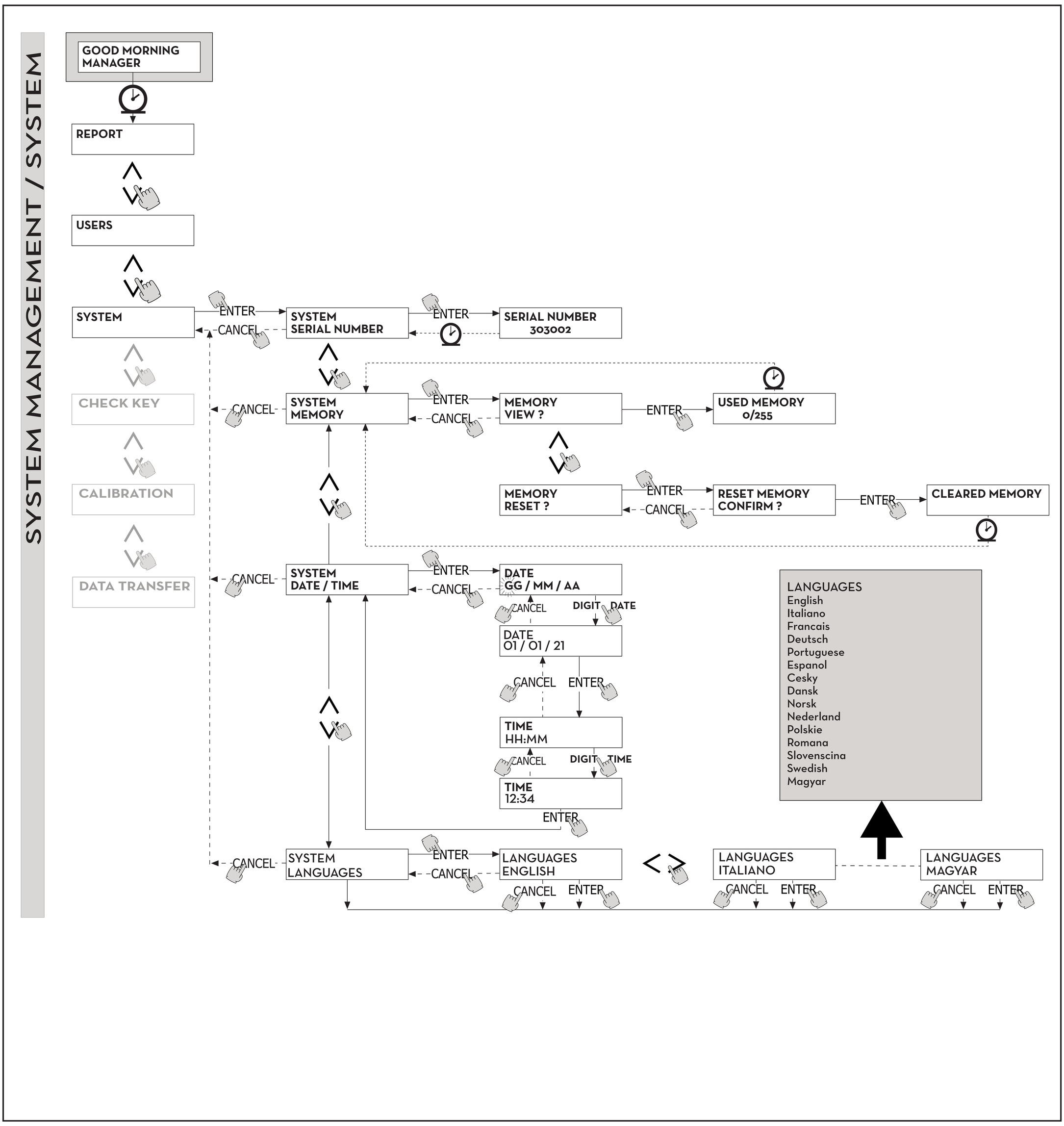

18.4 CHECK KEY

FOREWORD

Used (by the Manager only) to check whether a key is authorised on a given SELF SERVICE, and to identify the user to whom it is assigned. When AGILIS displays "TOUCH KEY", simply touch the key to the reader for the system to recognise it. The check can have four possible outcomes:. We show the CHECK KEY flow chart below. If the key is a MASTER KEY, the display reads:

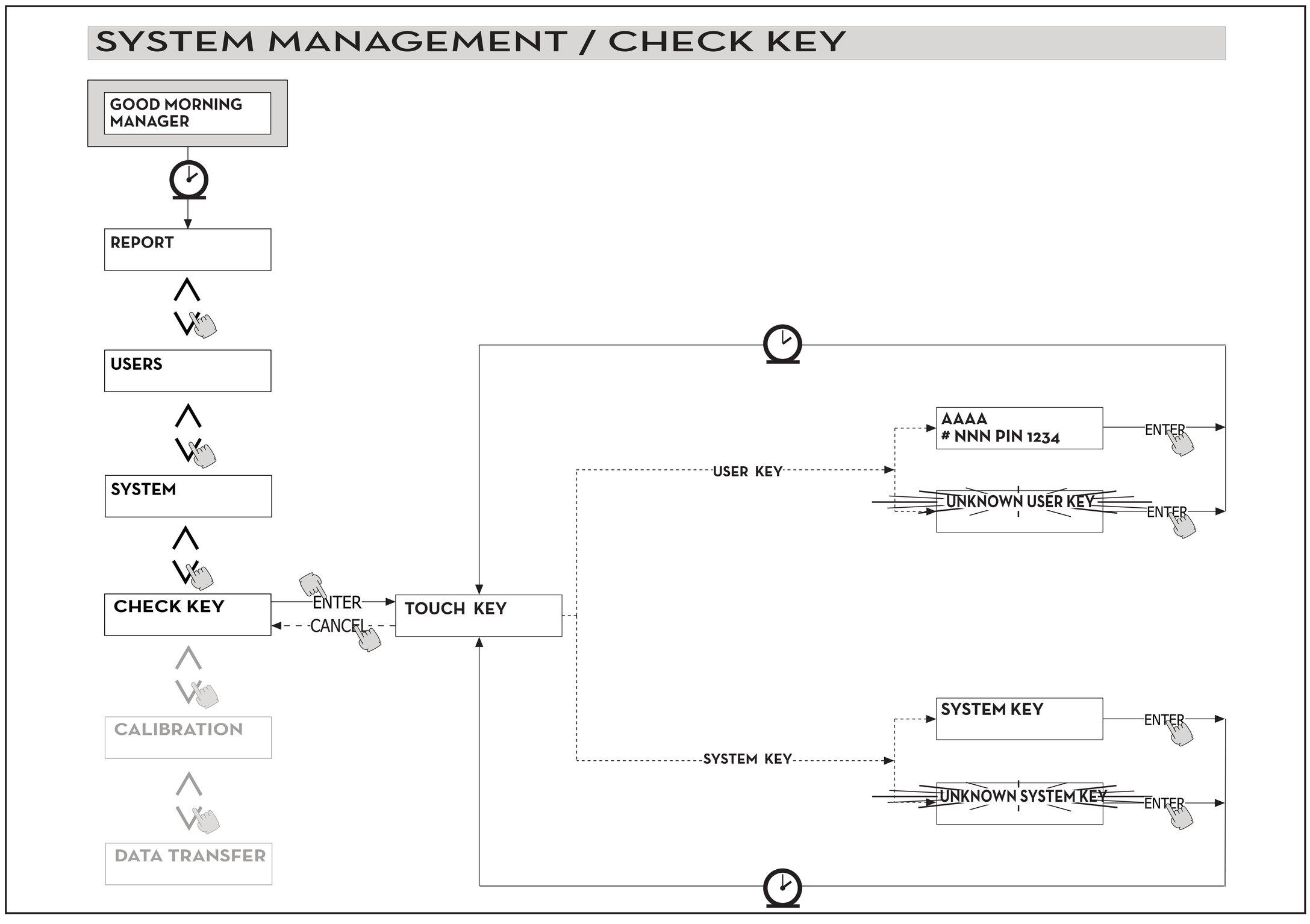

1. "UNKNOWN SYSTEM KEY" if it is NOT authorised as the master key for the SELF SERVICE in question
2. "SYSTEM KEY" if this is authorised as the master key for the SELF SERVICE in question

N.B.: note that there is only one MASTER KEY per unit, you cannot have two master keys for a single SELF SERVICE. However, you can set the same master-type key to be the "MASTER KEY" for multiple SELF SERVICE units.

If the key is a USER KEY, the display reads:

1. "UNKNOWN USER KEY" if the key is NOT authorised for use with the unit (i.e. it is not assigned to any user).
2. The system displays the user data as shown if the key is recognised.

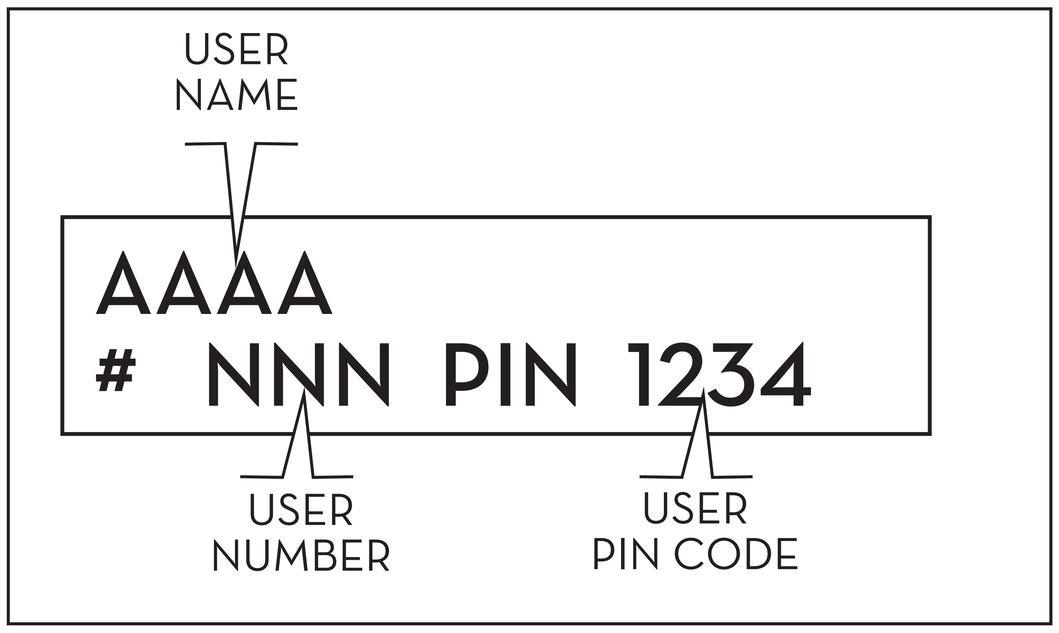

This manual is the property of PIUSI S.p.A. Whole or partial reproduction of this manual is forbidden.

18.5 CALIBRATION

FOREWORD

Accesses a submenu with two options, for checking or modifying the CALIBRATION of the LITER COUNTER/ PULSER.

CALIBRATION VIEW

Displays the current CALIBRATION FACTOR. The SELF SERVICE must be calibrated for the liter counter in use.
Before it is calibrated, the factor displays as “K FAC 1.0000”.
After calibration, the K FAC will no longer be 1.0000

NOTE: calibration serves to optimise the precision of the liter counter. After calibration, the K FAC will be different from 1.0000, normally within 5% of the default value, i.e. in the range 0.9500 to 1.0500.

Larger deviations may indicate that the calibration procedure was not run properly.

CALIBRATION MODIFY

Accesses a submenu with the two following options for calibrating the liter counter.

CALIBRATION/ DIRECT

DIRECT calibration sets the K FACTOR directly.
This method can be used to correct the calibration factor by a known percentage, to compensate for an average error calculated over a number of transactions.

N.B.: always start with the current value of the K FACTOR to calculate the corrected value.

For instance, if the current value is 1.0120 (resulting from a previous calibration, since the factory setting is 1.0000) and you find that:

- the liter counter counts 1.5 % on average more than the “real” value, the new K FACTOR value must be calculated as follows to compensate for the error:

K FACT (new) = 1.0120 * (1 – (1.5/100)) = 0.9968

- the liter counter counts 0.8 % on average less than the “real” value, the new K FACTOR value must be calculated as follows to compensate for the error:

K FACT (new) = 1.0120 * (1+ 0.8/100)) = 1.0200

CALIBRATION/ BY DISPENSING

The BY DISPENSING method calibrates the liter counter by dispensing fuel into a SAMPLE CONTAINER.
This is the most practical and quickest method, since it does not require the user to make any calculations. The calibration transaction can be interrupted and resumed as convenient, and can be considered completed when the level is visible in the graduated section of the sample container.
Press ENTER to confirm completion of the calibration transaction.

N.B.: to obtain a good calibration, you must use a precise sample container of capacity no less than 20 liters, and in particular take care to:

- purge all air from the pump, fuel lines and liter counter itself, by dispensing fuel until the flow is full and steady.
- Stop the flow by closing the nozzle without shutting off the pump.
- Do not reduce the flow to reach the graduated section of the container.

The CORRECT TECHNIQUE CONSISTS IN STARTING AND STOPPING AT A CONSTANT FLOW RATE, UNTIL YOU REACH THE DESIRED LEVEL, USING THE MINIMUM NUMBER OF STARTS AND STOPS

If the value indicated by the SELF SERVICE is different from the amount in the sample container (REAL VALUE), correct the value shown by the SELF SERVICE until it matches the REAL VALUE.
As soon as you press ENTER to confirm the corrected value, the system calculates the new calibration factor (K factor) and displays it for a few seconds.
The system will now use the new calibration factor.

N.B.: one dispensing operation is enough to obtain definitive on-site calibration of the liter counter. Once calibration is completed, we recommend checking the result to make sure that the liter counter is now dispensing fuel precisely.

To do so, run a normal transaction with a user code (not the master code).
We show the CALIBRATION flow chart below.

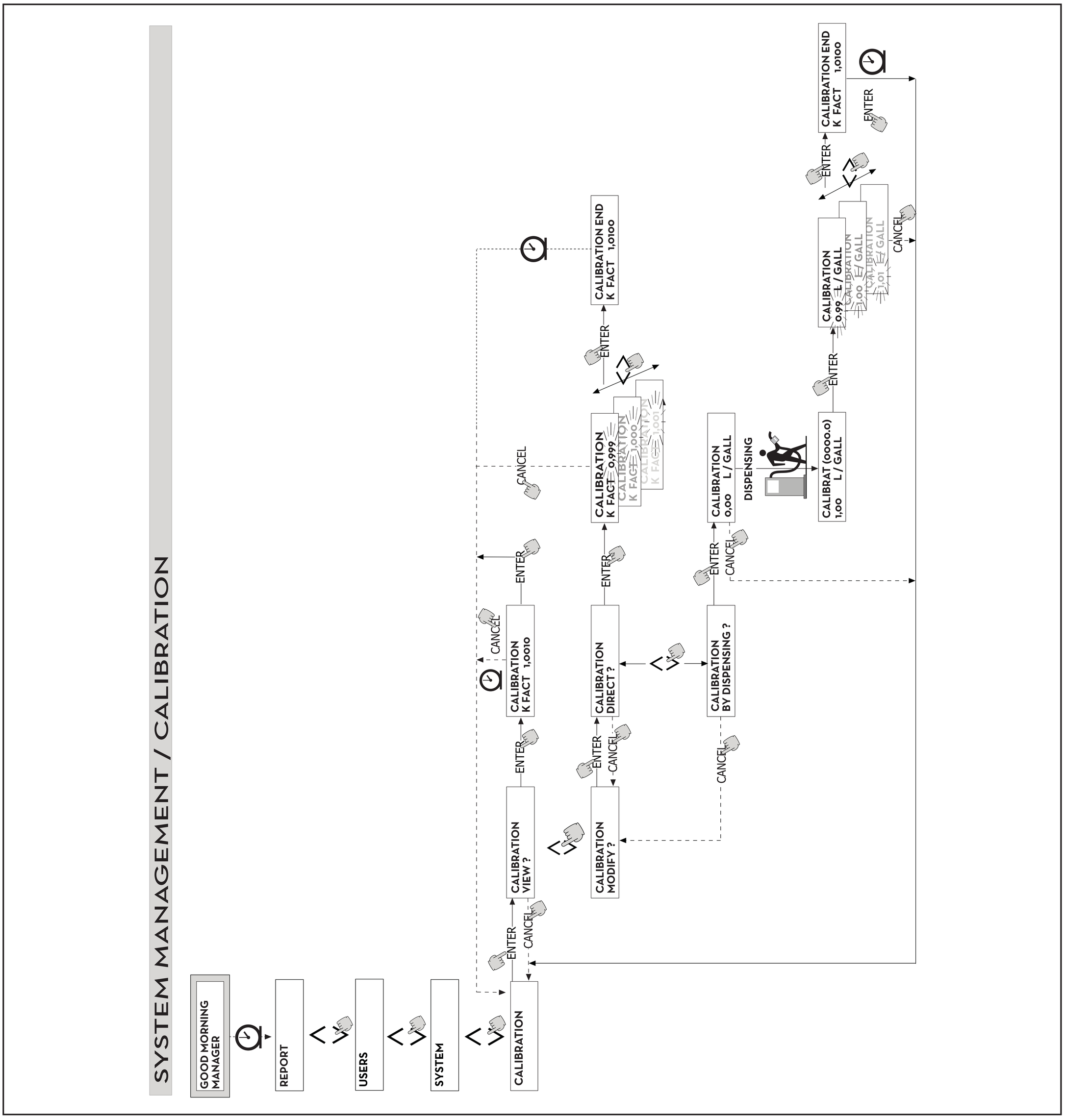

This manual is the property of PIUSI S.p.A. Whole or partial reproduction of this manual is forbidden.

18.6 DATA TRANSFER

FOREWORD
Transfers the transaction data from the AGILIS's internal memory to the MASTER KEY. You can then use the key to transfer the data to a PC with a KEY READER, which must be running the AGILIS SELF SERVICE MANAGEMENT software.

N.B.: for the installation of the program and how to download the data to a PC, refer to the manual supplied with the optional AGILIS SELF SERVICE MANAGEMENT software.

As soon as the key is touched to the reader, the system displays one of the following messages:

1. UNKNOWN MASTER KEY

The key is a USER KEY, or a MASTER KEY, but not authorised for the SELF SERVICE AGILIS in question.

2. KEEP IN PLACE / WAIT

This message displays when ALL the following conditions are satisfied:
- the key is the MASTER for the unit in question;
- The SELF SERVICE AGILIS has data in memory that have not yet been transferred;
- the key is EMPTY, i.e. it has already transferred all previously downloaded data to the PC.

N.B.: the MASTER KEY is EMPTY when it has NO TRANSACTION DATA in memory.

The master key is FULL ("FULL SYSTEM KEY" displays) even if it has ONLY ONE transaction in memory. If the key is used to download data from an AGILIS unit (any number of transaction, from 1 to 255), its status changes from EMPTY to FULL, and no other transactions can be downloaded to it.

To download more transactions from the MC BOX to the PC using the key, you must:
- download the data in the key's memory to the PC; the key is now EMPTY again;
- download the new transaction data from the AGILIS unit to the key;
- download the new data from the key to the PC.

A single key can be authorised as the MASTER KEY for a number of filling stations. However, the key can only be used to transfer data to the PC from ONE FILLING STATION AT A TIME.

When the data has finished transferring from the AGILIS to the key, the system briefly displays the result (OK or FAILED). Only if the result is OK does the key's status change to FULL MEMORY KEY, otherwise it remains EMPTY and you can try to transfer the data again.

N.B.: the data transfer from the MC to the key can last from a few seconds to several minutes, depending on the number of transactions. To ensure that the transfer works pro9perly, you must keep the key touched to the reader until the end-of-procedure message displays; moving the key during the transfer process will invalidate the procedure.

FULL MASTER KEY

This message indicates that the key is FULL and you must download its data to the PC. Two situations may occur:
1. the memory of the AGILIS controller is NOT FULL; less than 255 transactions are in the unit's memory. In this case, even if you cannot download its memory, you can still run transactions until you reach the 255 transaction limit;
2. the memory of the controller is FULL; 255 transactions are in the unit's memory and they have NOT YET been downloaded to the key. In this case, no further transactions can be run until the unit's memory has been downloaded to the key. You will be prompted "CONFIRM M. KEY / OVERWRITE?". If you confirm (press ENTER), the system will write the 255 new transactions over any data already on the key, even if it has not yet been transferred to the PC.

N.B.: the overwritten transactions will be lost, but the SELF SERVICE AGILIS unit will be able to dispense fuel again.

MEMORY EMPTY

This message indicates that the SELF SERVICE AGILIS has no data to transfer as its memory is empty.
We show the DATA TRANSFER flow chart below.

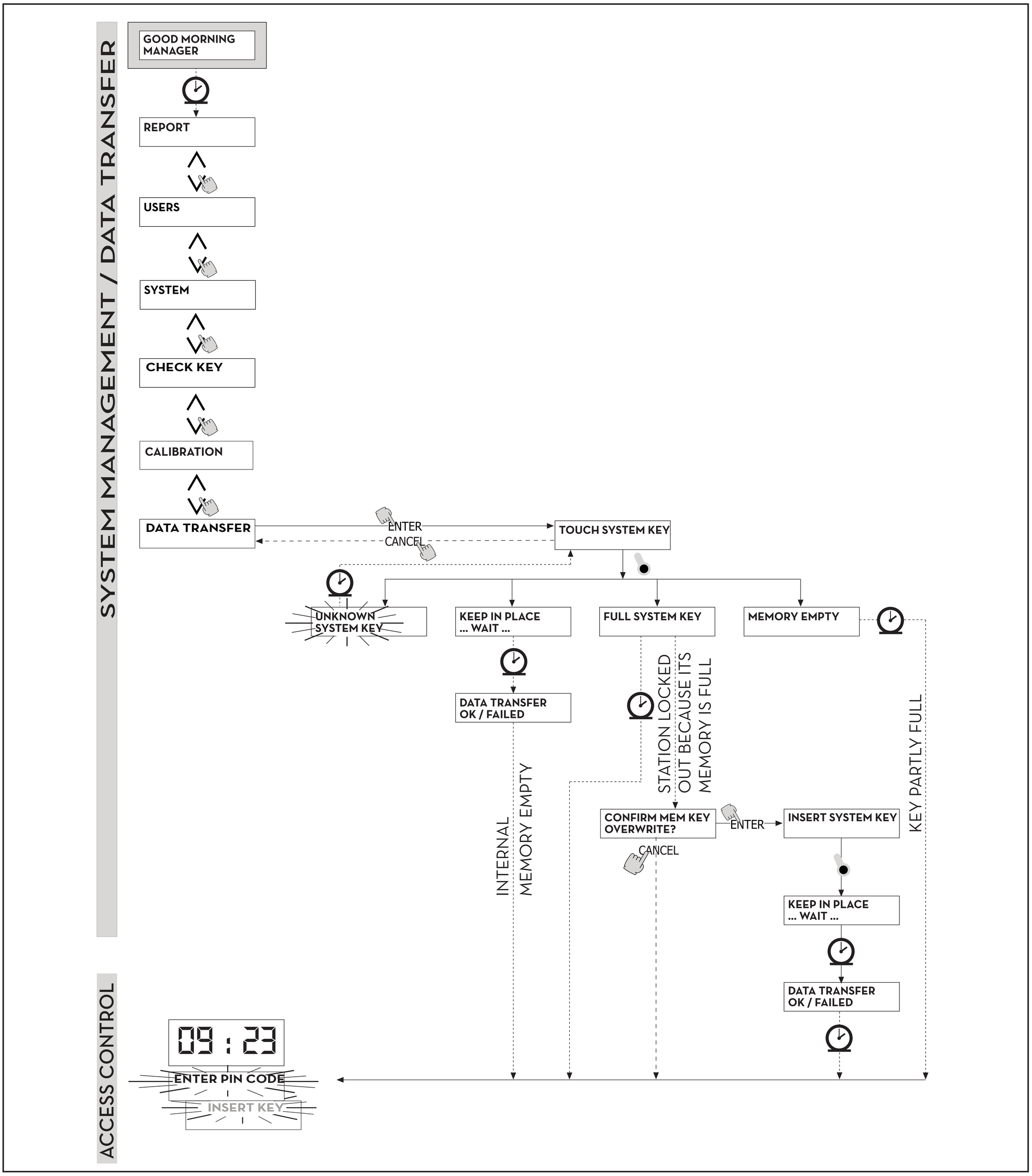

This manual is the property of PIUSI S.p.A. Whole or partial reproduction of this manual is forbidden.

18.7 DISPENSING

FOREWORD

The DISPENSING section is used to dispense fuel.
As soon a user is recognised, and after any optional inputs, the system enables dispensing.
The NUMERIC displays goes from displaying the time to displaying the amount of fuel dispensed, displaying "OOO.O" or "OO.OO" depending on the number of decimal digits selected in the configuration procedure.
The ALPHANUMERIC display shows the USER NUMBER and flashes between:

- the selected UNIT (LITERS or GALLONS);
- The message "DISPENSING".

N.B.: the flashing "DISPENSING" message indicates that dispensing is enabled and that the pump will start running as soon as the nozzle is taken out of its holder.

Once the message "DISPENSING" displays, the user has a limited time within which to start dispensing fuel (see the START TIME OUT parameter in the CONFIGURATION section). If this time expires without dispensing starting, the pump is disabled and the display returns to prompting for a PIN CODE or KEY.

The dispensing operation may be freely interrupted and resumed. However, if the interruption lasts for more that a given time (see the FILLING TIME OUT parameter in the CONFIGURATION section), the pump is disabled. The pump stops running at the end of the transaction when the nozzle is restored to its holder.

N.B.: if necessary, you can stop the pump without replacing the nozzle by pressing STOP.

If connected to a remote printer, a report line will print out automatically at the end of each transaction, regardless of whether the configuration parameter TICKET RECEIPT has been set to AUTO or ON REQUEST.

N.B.: if the system has already returned to the LEVEL CONTROL section, you must return to the ACCESS CONTROL section by pressing STOP before you can print out a ticket manually.

18.8 DISPENSING WITH PRESET

FOREWORD

Before starting to dispense fuel, if the system has already enabled the pump and the message "DISPENSING" is flashing on the display, the user can enter a PRESET value on the keypad

N.B.: you can set a value of 1 to 999.9 L/Gal if a decimal digit is available, otherwise 1 to 9999 L/Gal

The pump is temporarily disabled until the entered value is confirmed by pressing ENTER. The ALPHANUMERIC display will display the preset value while fuel is being dispensed

N.B.: dispensing stop automatically when the preset amount is reached. Dispensing cannot be continued manually, since the pump is disabled and the ticket is printed out (when set to AUTO or requested by the user) when the preset amount is reached.

18.9 OPTIONAL INPUTS

FOREWORD

Before starting to dispense fuel, depending on the SYSTEM CONFIGURATION, the user may be prompted to enter the following data.

REGISTRATION NUMBER

This is the registration (or ID number) of the vehicle being filled. You can enter a 10 character alphanumeric string.
The user must enter at least 1 character to continue.

ODOMETER

This is the MILEAGE of the vehicle being filled.
You can enter a 6 character numeric string. The user must enter at least 1 digit to continue.

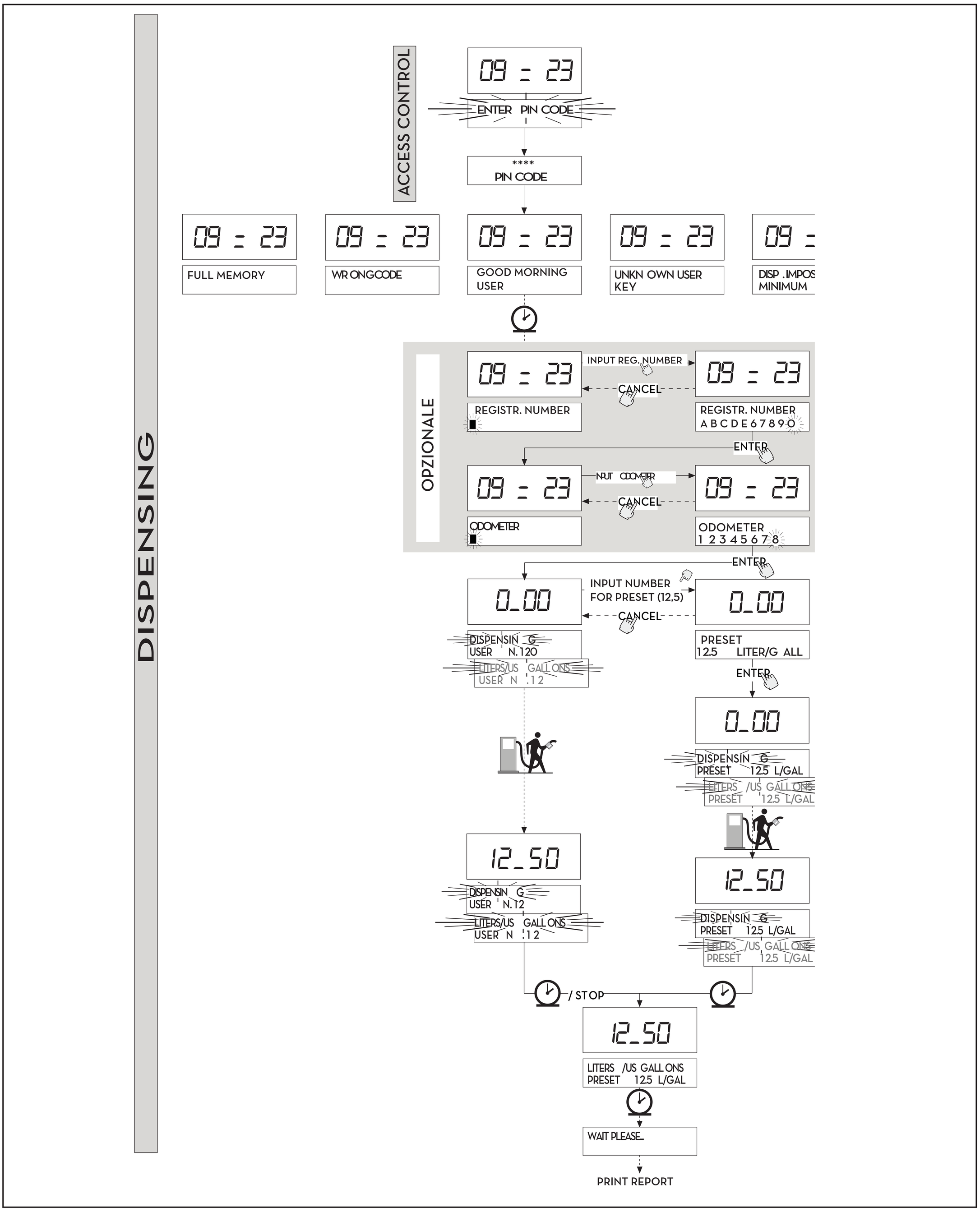

This manual is the property of PIUSI S.p.A. Whole or partial reproduction of this manual is forbidden.

18.10 DISPENSING - MESSAGE

FOREWORD

As soon as a USER enters his USER PIN CODE or touches his USER KEY to the unit's reader, the system checks his authorisation in the ACCESS CONTROL section and displays one of the following messages:

GOOD MORNING "USER"

The user has touched an authorised USER KEY to the reader or entered an authorised USER PIN CODE. The system recognises him and displays the USER name with which he is registered

UNKNOWN USER KEY

The user has touched an unauthorised USER KEY to the reader and the transaction is not allowed.

N.B.: the fact that the system displays this message means that the key was read correctly, but its number is not authorised for the AGILIS unit in question.

WRONG CODE

The user has entered an unauthorised USER PIN CODE on the AGILIS unit and the transaction is not allowed. After a few seconds the message disappears and the user can enter his code again.

DISPENSING IMPOSSIBLE/ MINIMUM LEVEL

The fuel tank level is below the minimum and the transaction cannot be completed. This only happens when the level contact is connected to an external level sensor.

FULL MEMORY

The AGILIS's memory is full and the transaction cannot be completed.

N.B.: the user must contact the system manager to enable dispensing.

The Manager can do this in three ways:

1. transfer the data to the MASTER KEY (as described in the "DATA TRANSFER" paragraph).
2. If the AGILIS is connected to a PC via RS 485, restore the connection, launch the AGILIS SELF SERVICE MANAGEMENT option and wait for the system to automatically download the data from the MC's memory.
3. If neither of the above options are available, the manager can run a MEMORY RESET (see the SYSTEM MENU section).

19 MAINTENANCE

19.1 ROUTINE MAINTENANCE

SELF SERVICE has been designed so as to require minimum maintenance.
However the following routine inspections and maintenance operations should be carried out regularly in order to ensure dispenser safety and efficiency.

19.2 DISPENSER MAINTENANCE

SAFETY WARNINGS

The distribution system has been designed and built to require minimum maintenance.
Before carrying out any maintenance work, disconnect the dispensing system from any electrical and hydraulic power source.
During maintenance procedures, using personal protection equipment (PPE) is mandatory.
Always consider the following recommendations to use the system correctly.

Personnel authorised to perform maintenance procedures
Maintenance procedures must be performed exclusively by qualified personnel.
Any misuse may lead to a decline in performance, danger for people and/or things, besides voiding the warranty.

CAUTION: maintenance of electrical parts can be carried out only by a qualified electrician or electronics engineer.

Before performing any maintenance make sure to unplug the device from the power supply to turn it off and isolate it from the mains.

If the device is sold without cable to provide periodic verification of the circuit grounding in accordance with current regulations.

19.3 OPENING AND CLOSING THE SELF SERVICE

Check the pump, pipes and the other internal components (filter and pulser) and keep them clean.
Check that no leakage is visible on the flanged or threaded connections and that the flexible hoses do not show any damage.

This manual is the property of PIUSI S.p.A. Whole or partial reproduction of this manual is forbidden.

19.4 PUMP AND PIPES

Keep delivery hose and nozzle clean. Make sure that:
- The hose is intact with no damage caused by vehicle transit.
- The threaded connections are tight and leak-free.
- The swivel fittings (at the dispenser outlet and on the nozzle) turn freely and are leak-free.

19.5 PIPE AND DELIVERY NOZZLE

Keep delivery hose and nozzle clean. Make sure that:
- Hose does not show any damage caused by vehicle transit
- Threaded connections are tightened and without any leakage
- The swivel fittings (at the dispenser outlet and on the nozzle) turn freely and are leak-free.
- The hole in the automatic stop probe at the end of the nozzle hose (spout) is always clean.

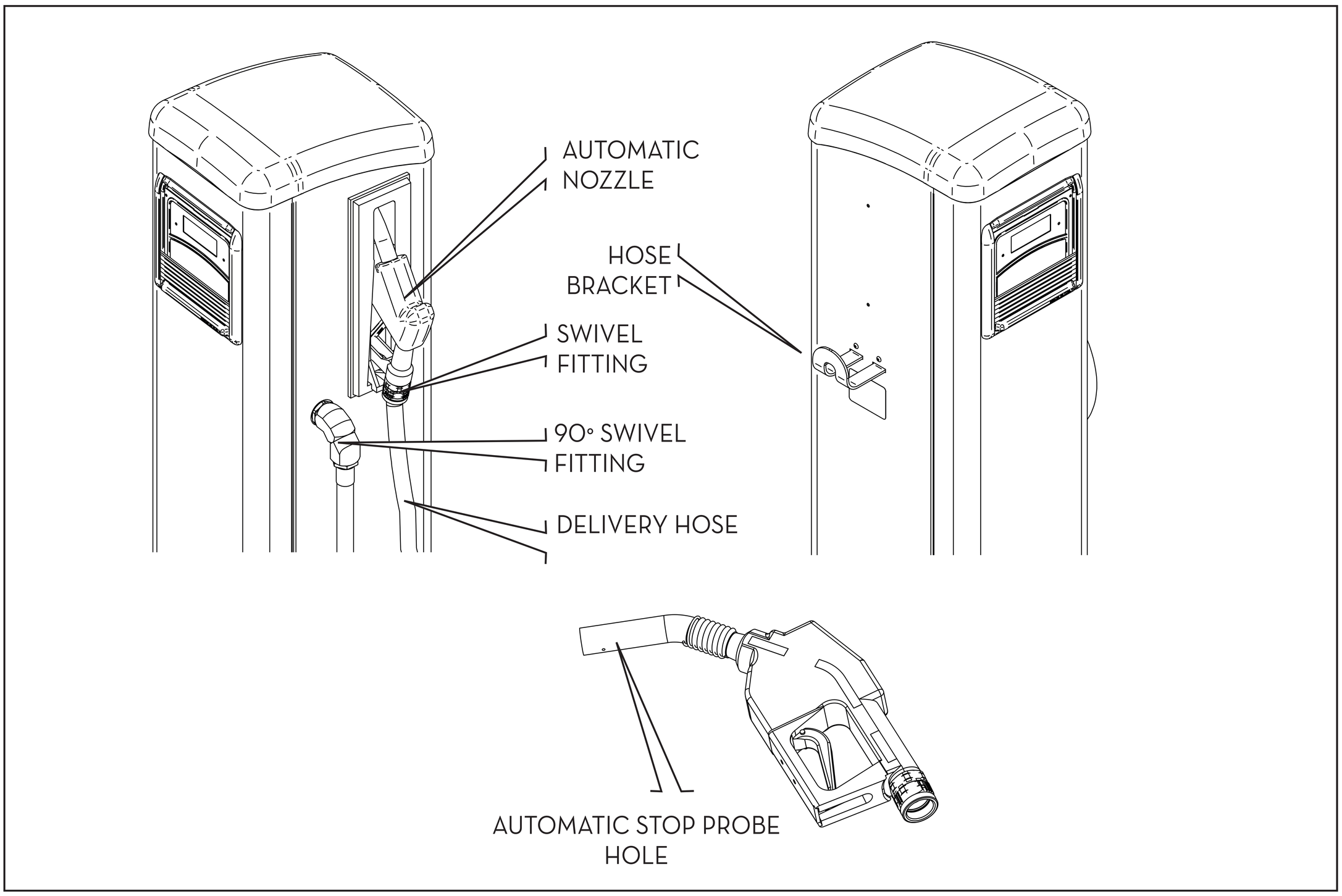

19.6 FILTER MAINTENANCE

FOREWORD

SELF SERVICE is equipped with different filters performing different functions. Inspection and cleaning (or replacement) of each filter is extremely important to ensure:

- Protection of the various components of the dispenser (pulser, pump, nozzle).
- Lasting performance of the dispenser (max flow rate).
- Protection of the engines using the supplied diesel fuel.

CAUTION: Dirty or partially obstructed filters can increase pressure drops in such a way as to cause a significant reduction of the max. flow rate of the pump. Dirty or partially obstructed filters in the pump suction line can cause a strong increase in suction vacuum which, in turn, can result in higher noise levels of the pump.

PRELIMINARY OPERATIONS

To facilitate operations on filters (see below), SELF SERVICE stations are equipped with:

- PAN to collect any spilled liquids, placed under the delivery cartridge filter
- RELEASE VALVE, installed on the suction filter

The procedures described in this paragraph should always be followed before carrying out any operations on filters. They are strictly necessary to ensure safety when working and to prevent any risk of pollution.

1. Close the valve installed on the suction line upstream from the SELF SERVICE station inlet.

CAUTION: this valve, which is usually not present in installations with underground tank, MUST BE USED in above ground tank installations.
The valve, which is not supplied with the dispenser, must be fitted by the installer.

2. Put the small pipe connected with the RELEASE VALVE in a vessel and open the valve with a screwdriver.
   BE CAREFUL: DIESEL FUEL LEAKING OUT!!

This manual is the property of PIUSI S.p.A. Whole or partial reproduction of this manual is forbidden.

3. Start the pump and dispense the fuel into a suitable capacity container. The nozzle will start dispensing fuel and then, thanks to air intake through the release valve, the flow will decrease progressively before being interrupted.
4. Return the nozzle to its holder; the pump will stop.
5. Carefully close the RELEASE VALVE repositioning the pipe connected to it so it faces upwards.
6. Set the dispenser main switch to OFF to prevent accidental starts during filter maintenance.
7. Clean / replace the filters as described in the following paragraphs.
8. Clean the collecting PAN carefully, so that possible leaks can be identified more readily.
9. Set the dispenser main power switch to ON.
10. Keeping the dispenser front door OPEN, start the pump and dispense the fluid into a vessel until a CONTINUOUS AIR-FREE FLOW is obtained. Close the nozzle WITHOUT RETURNING IT TO ITS holder: the pump will operate in bypass mode, producing the maximum delivery pressure.
11. During pump bypass operation CHECK THE ABSENCE OF LEAKAGES ARE AVAILABLE, then put the nozzle back in its seat;
12. Lock station door.

19.6.1 SUCTION FILTER

This filter is installed immediately upstream from the pump suction port. To inspect and clean it act as follows:

1. Undo the two filter cover screws and remove the cover from the body.
2. Extract the basket filter.
3. If necessary: wash the filter and blow compressed air through it.
4. Refit the basket filter in the filter body.
5. Inspect and clean- the O-ring, refit the cover and tighten the screws..

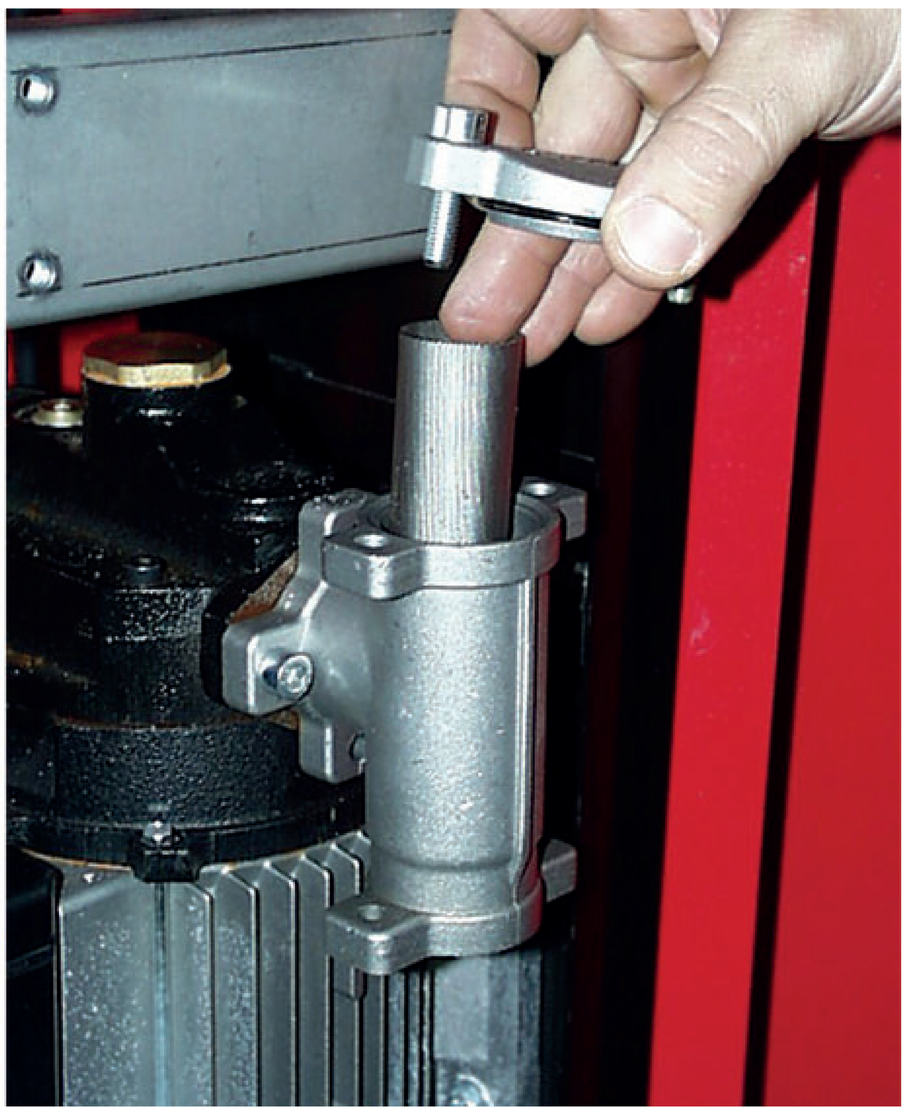

19.6.2 PUMP FILTER (FITTED ON MODELS WITH PANTHER PUMPS ONLY)

It is installed in pump body, as a standard accessory of PANTHER pump. It is just after the suction filter, as a consequence it will not require frequent cleaning.

To inspect and clean it act as follows:

1. Undo the two filter cover screws and remove the cover from the body.
2. Use pliers to extract the mesh filter.
3. If necessary: wash the filter and blow compressed air through it.
4. Refit the filter in its seat in the pump body, making sure it does not protrude beyond the cover seat.
5. Inspect and clean the flat gasket, refit the cover and tighten the screws.

CAUTION: After a reasonable number of maintenance operations, replace the flat gasket of the cover filter.

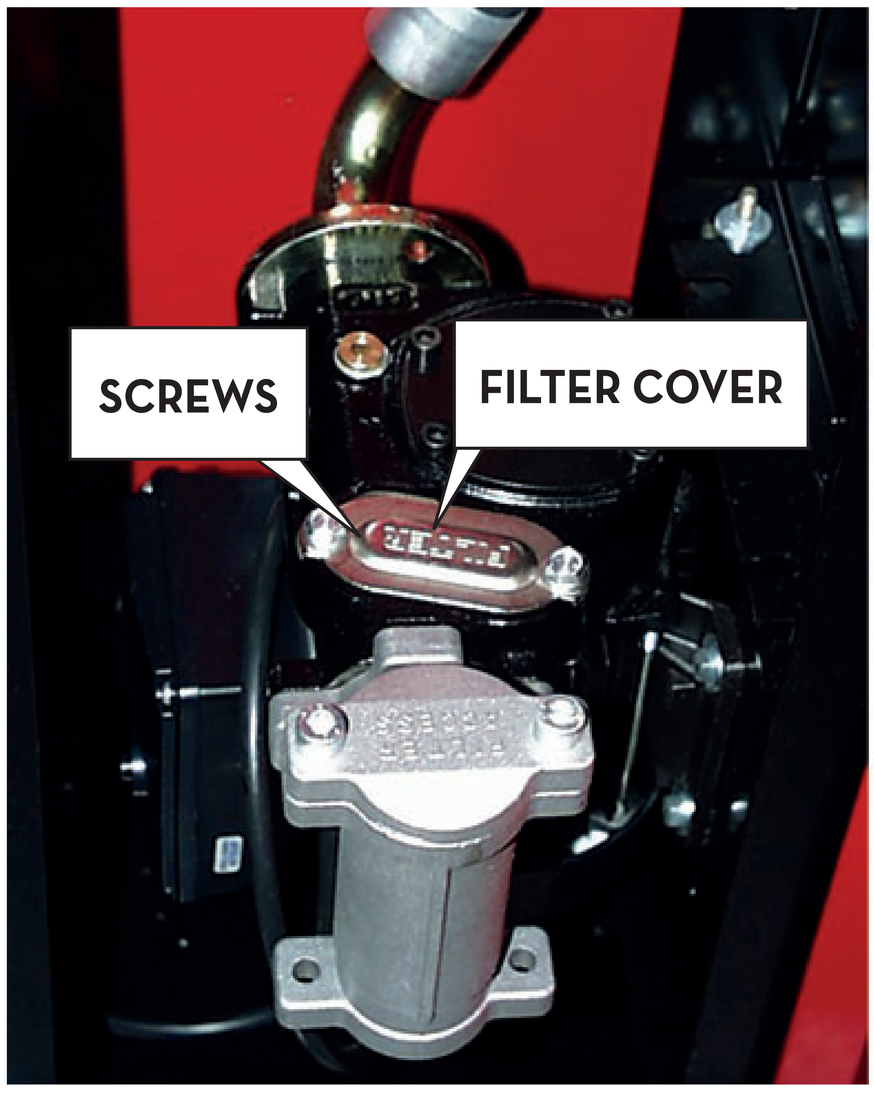

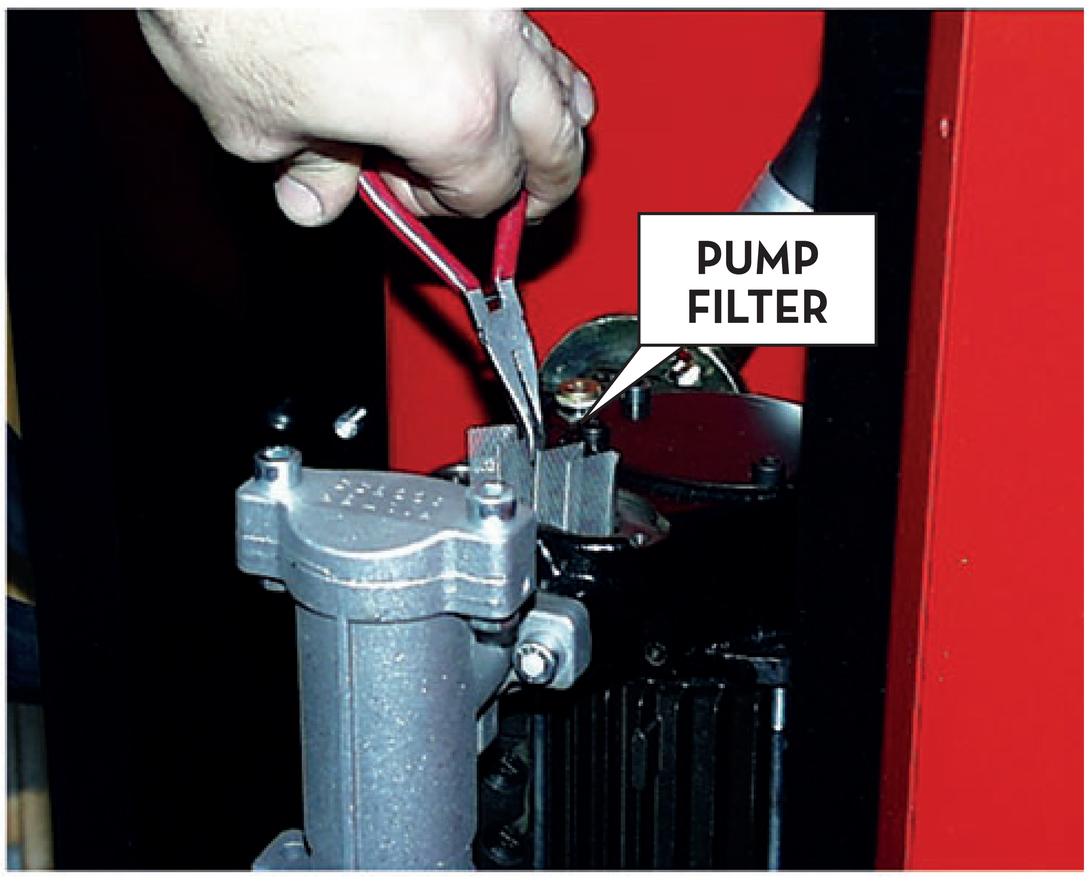

19.6.3 PULSER FILTER

The pulser filter is an additional protection which prevents foreign bodies from entering the oval gear pulser. As it is installed after the suction filters, it does not require any regular checking and cleaning.
However, should the filter be cleaned for any reasons and/or in case of special maintenance operations, remove the pulser (if necessary) and proceed as described in PULSER MANUAL.

This manual is the property of PIUSI S.p.A. Whole or partial reproduction of this manual is forbidden.

19.6.4 DELIVERY FILTER (only for SELF SERVICE MC AGILIS models)

The delivery filter of the WATER-ABSORBING CARTRIDGE type.
It represents a fundamental element for the protection of the engines using fuel delivered by the station.
This kind of filter separates and absorbs any water present in the pumped fuel oil.
When water is absorbed, the filtering capacity is progressively reduced with a resulting increase in pressure drops caused by the filter.
The filter CANNOT BE CLEANED OR REGENERATED; after a certain operating time it MUST BE REPLACED to restore dispenser performance (max flow rate).

CAUTION: Filter life is usually very long but it can vary remarkably depending on the quantity of water in the fuel. In case of a large quantity of water, the filter could get obstructed in a few minutes.

To replace the filter, proceed as follows:
1. Use a filter chain wrench to loosen the head filter.
2. Fully unscrew the filter from the head by hand and remove the filter.
3. Inspect and, if necessary, clean the external thread on the head and the filter seal seat.
4. Place a new filter (complete with seal) manually in position and screw as tightly as possible (wet the seal with Diesel fuel).
5. Tighten the filter using the filter chain wrench, taking care not to overtighten.

CAUTION: Some station models are equipped with DOUBLE-CARTRIDGE FILTER. Both cartridges operate simultaneously and must be replaced at the same time.

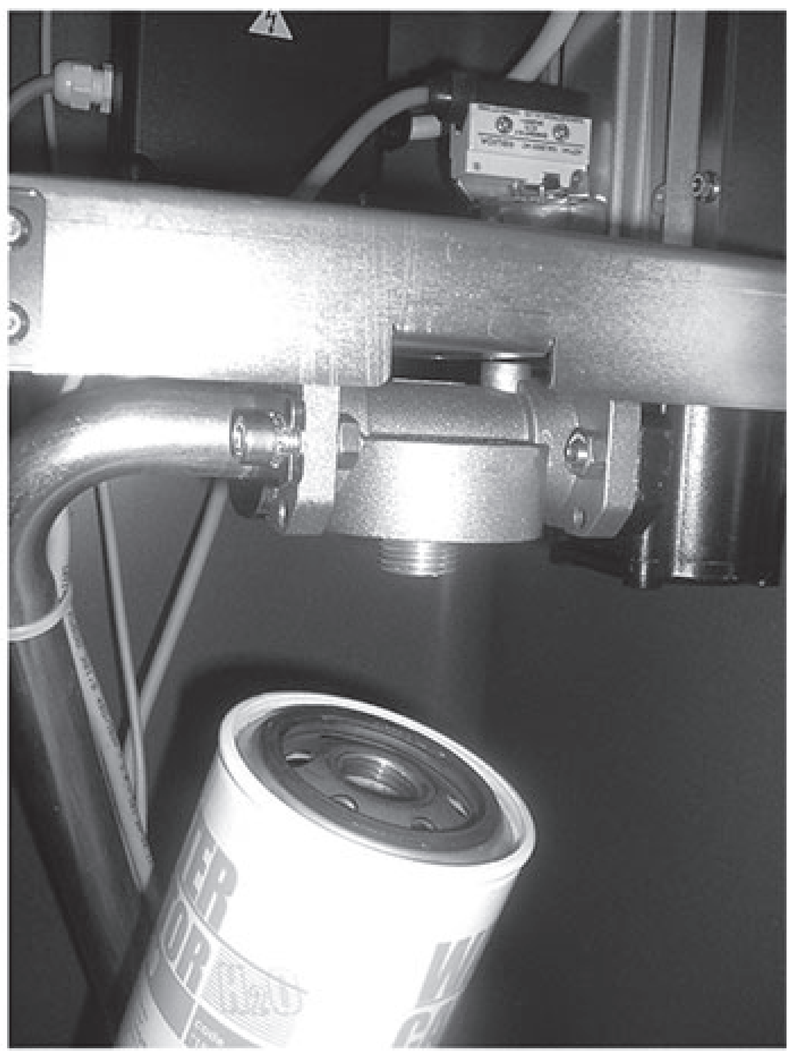

19.6.5 DELIVERY FILTER (only for SELF SERVICE TANK MC AGILIS models)

On the SELF SERVICE TANK MC AGILIS, the filter is only installed externally. For the assembly, some operations must be carried out as outlined in the following paragraphs:

1	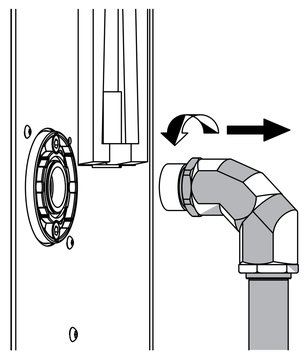
2	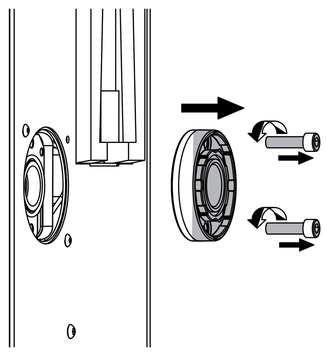
3	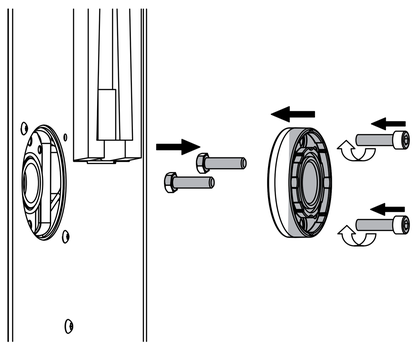
4	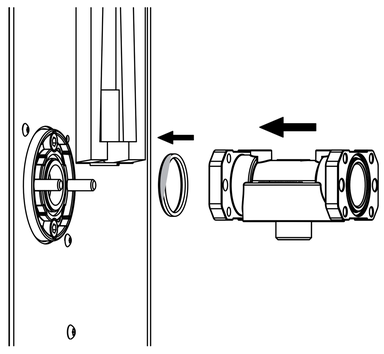
5	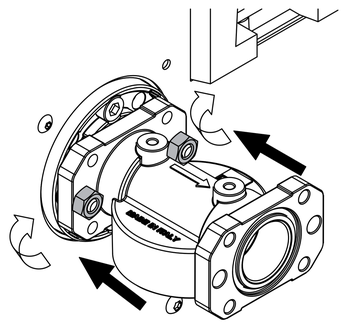
6	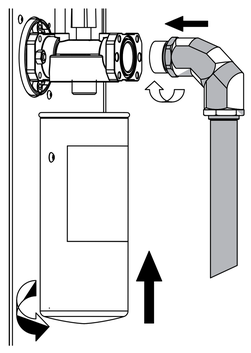

This manual is the property of PIUSI S.p.A. Whole or partial reproduction of this manual is forbidden.

19.7 EXTRAORDINARY MAINTENANCE

CAUTION: maintenance of the electrical parts can be performed only by a qualified electrician or electronics engineer.

Before performing any maintenance make sure to unplug the device from the power supply to turn it off and isolate it from the mains.

If the device is sold without cable to provide periodic verification of the circuit grounding in accordance with current regulations.

- Checking the fuses: to access the fuses, open the unit and access the components that are live during normal use. Disconnect the unit from the mains power supply to allow this to be done safely.

19.8 CHECK AND REPLACEMENT OF FUSES

For checking and replacing fuses on electronic boards:

1. Disconnect the unit's main power supply.
2. Open the SELF SERVICE door to access the controller.

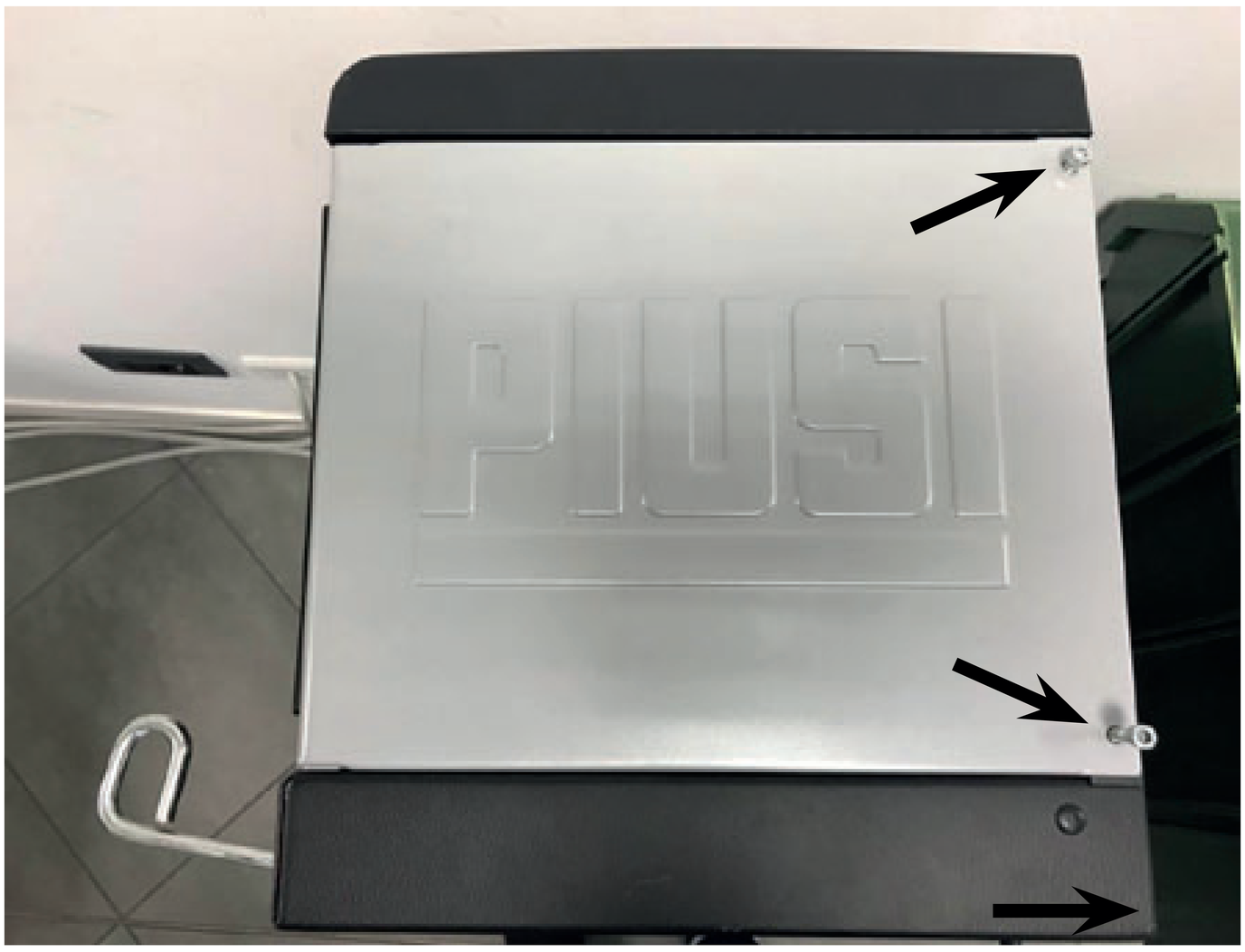

3. Loosen the screws of the metal rear panel to access the circuit boards compartment.

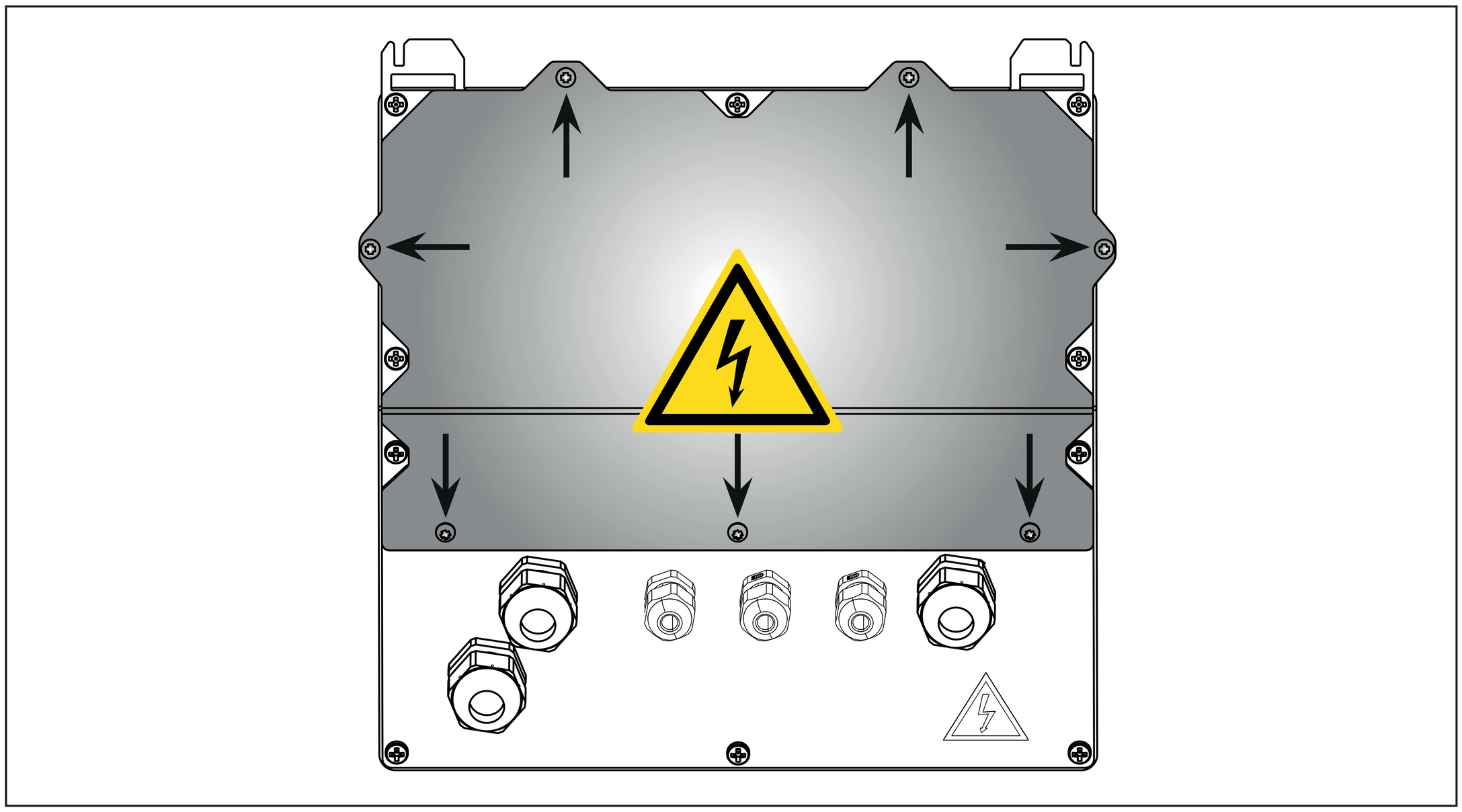

4. Check the condition of the 3 fuses and replace them if necessary

F1 800 mA T (time delay) power supply fuse on AC supply input.
F2 20 A T (time delay) motor fuse.
F3 800 mA T (time delay) power supply fuse on the AC/DC converter output.

5. Tighten the screws of the metal rear panel to close the circuit boards compartment and reconnect the power supply.

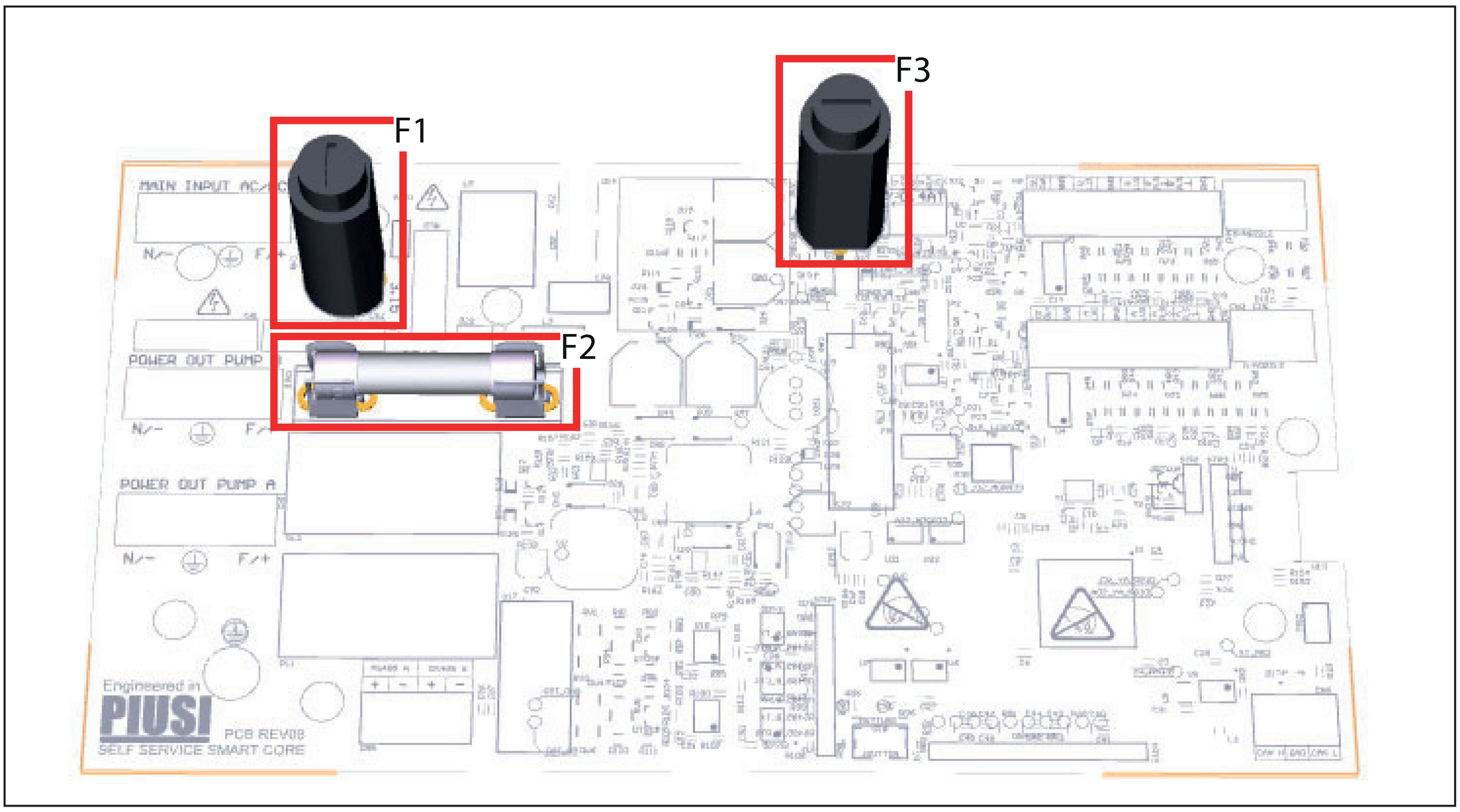

This manual is the property of PIUSI S.p.A. Whole or partial reproduction of this manual is forbidden.

19.9 FIRMWARE UPDATE

FW UPDATE MODE

This option prepares the controller for a firmware update (resident software) via a USB cable connection to a PC. This is something that most likely will never need to be done during the unit's lifetime.
Access the UPDATE FIRMWARE menu by pressing the key combination # + 2 when in the SYSTEM menu to enter the advanced options menu.

DEFAULT value: NO
Values: YES (enters FW Update Mode).

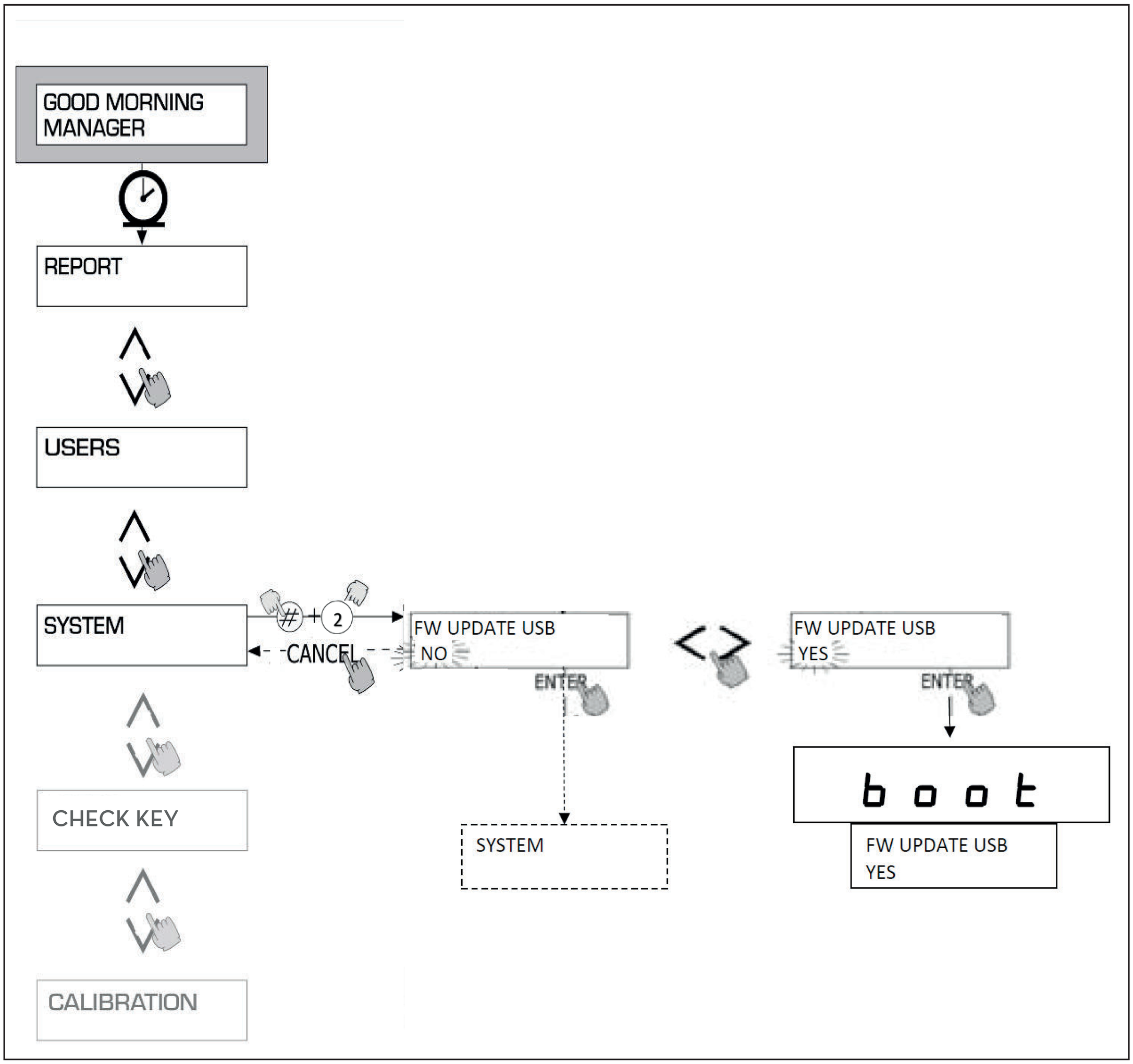

20 TROUBLESHOOTING

20.1 MECHANICAL AND HYDRAULIC PROBLEMS

PROBLEM	POSSIBLE CAUSES	POSSIBLE SOLUTIONS
THE MOTOR IS NOT TURNING	No power.	Set the ON/OFF switch on the pump to the ON position. Reset the external differential switch. Check the electrical connections.
	Fuses blown.	Replace fuses in the electric panel
	Motor problems.	If the rotor is blocked, disassemble and check for damage or obstruction and reassemble. Contact the customer service.
THE MOTOR DOES NOT START AGAIN WITH THE NOZZLE CLOSED	Supply voltage too low.	Check that the supply voltage is not 5% lower than the rated voltage.
LOW OR NO FLOW RATE	Excessive suction vacuum.	Lower the SELF SERVICE in relation to the level of the tank or increase the section of the pipes.
	High pressure drops in the circuit.	Use shorter or larger diameter pipes.
	Suction pipe resting on bottom of tank.	Raise the suction pipe.
	Low suction tank level.	Fill the tank.
	Air entering the suction pipe or pump.	Check tightness of the connections and the diesel level in the tank.
	Low motor rotation speed.	Check the motor feeding voltage: adjust the voltage or/and use larger cross section cables.
	Check valve blocked.	Clean or replace.
	Tank filter clogged.	Clean the filter.
	Pump filter clogged.	Clean the filter.
	Fluid loss.	Check tightness of the connections and the condition of the rubber hoses.
	Flow meter chamber obstructed.	Clean the flow meter chamber.
INSUFFICIENT FLOW METER ACCURACY	Presence of air in suction.	Check tightness of the connections.
	Calibration insufficient.	Calibrate the flow meter.
THE NOZZLE TRIPS TOO OFTEN	Automatic stop probe hole blocked.	Clean the automatic stop probe hole to remove dirt and/or obstructions.

This manual is the property of PIUSI S.p.A. Whole or partial reproduction of this manual is forbidden.

20.2 ELECTRICAL/ELECTRONIC PROBLEMS

PROBLEM	POSSIBLE CAUSES	POSSIBLE SOLUTIONS
SELF SERVICE AGILIS does not switch on	Lack of power due to: Incorrect connections. Upstream circuit breaker set to OFF. Fuse on power supply interrupted.	Check connections. Set circuit breaker to ON position. Check fuse.
A driver with an electronic key is not recognised	The electronic key has not been associated by the MANAGER.	The system MANAGER associates the key to the driver.
	The electronic key has been damaged and is no longer recognised by the system.	Change the electronic key. The system manager will also have to delete the old key's code and assign the new key to the user.
The motor does not start	Has not been connected correctly to the terminals.	Check connections, or (if present) check that the motor switch is set to the ON position.
Does not count during dispensing	The Pulser that emits the counting signals is incorrectly connected.	Check connections.
	The Pulser that emits the counting signals is NOT compatible with the electronics.	The electronics are designed to receive a "voltage free contact" or "Open Collector" signal at input. If the input signal is an incompatible voltage signal, in addition to the malfunction the electronic board is likely to be damaged
	Pulser board damaged.	Replace Pulser board
The count is not accurate	System is NOT calibrated.	Calibrate the system according to the procedure
The count is not accurate even after calibration, or is only accurate at low flow rates	The signal coming from the Pulser is outside the ranges compatible with the electronics.	The pulser signal must have a frequency of at most 300 Hz and Duty Cycle from 20% to 80%. Beyond these ranges, the system does not process the received data correctly. The system must be set within the correct ranges, inserting appropriate electronic interfacing equipment if needed (contact the Technical Assistance service for help with these options).
DISPENSING NOT POSSIBLE due to: - **Damaged keypad** - **Display not working i-Button key not working** - **Nozzle contact not working**	Wear, accidental damage, etc...	Dispense the fuel in EMERGENCY mode in MANUAL MODE. See instructions on accessing the selection DIP SWITCHES.

CAUTION:

ELECTRICAL HAZARD!

1. Contactaspecialisedelectricianorelectronics technician.
2. Shut off power to the unit.
3. Open the controller board compartment.
4. Identify the DIP Switch shown below.
5. Useasmallflatheadscrewdrivertoremovethe protective film on the DIP Switch (if present).
6. Set the DIP Switch to ON “manual MODE”.
7. Close the compartment.
8. Restore power.
9. The upper display will show only 4 hyphens “- - - -”, while the lower one will read “MANUAL MODE”. Dispensing starts when the nozzle is taken out of its holder

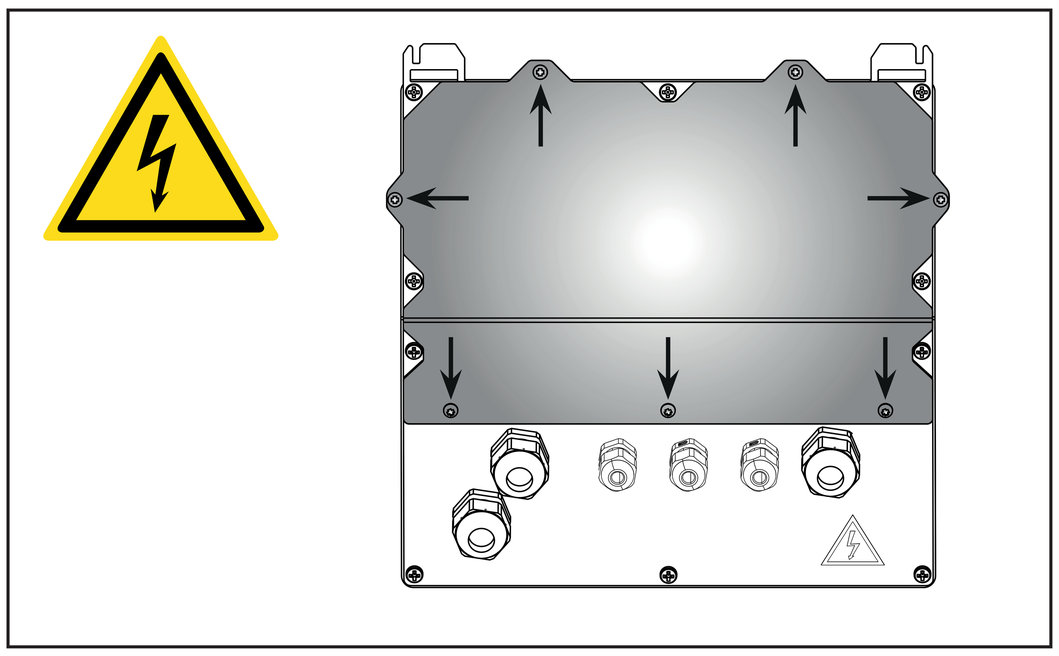

NOTE: Transactions completed in this mode are not logged or metered in any way.

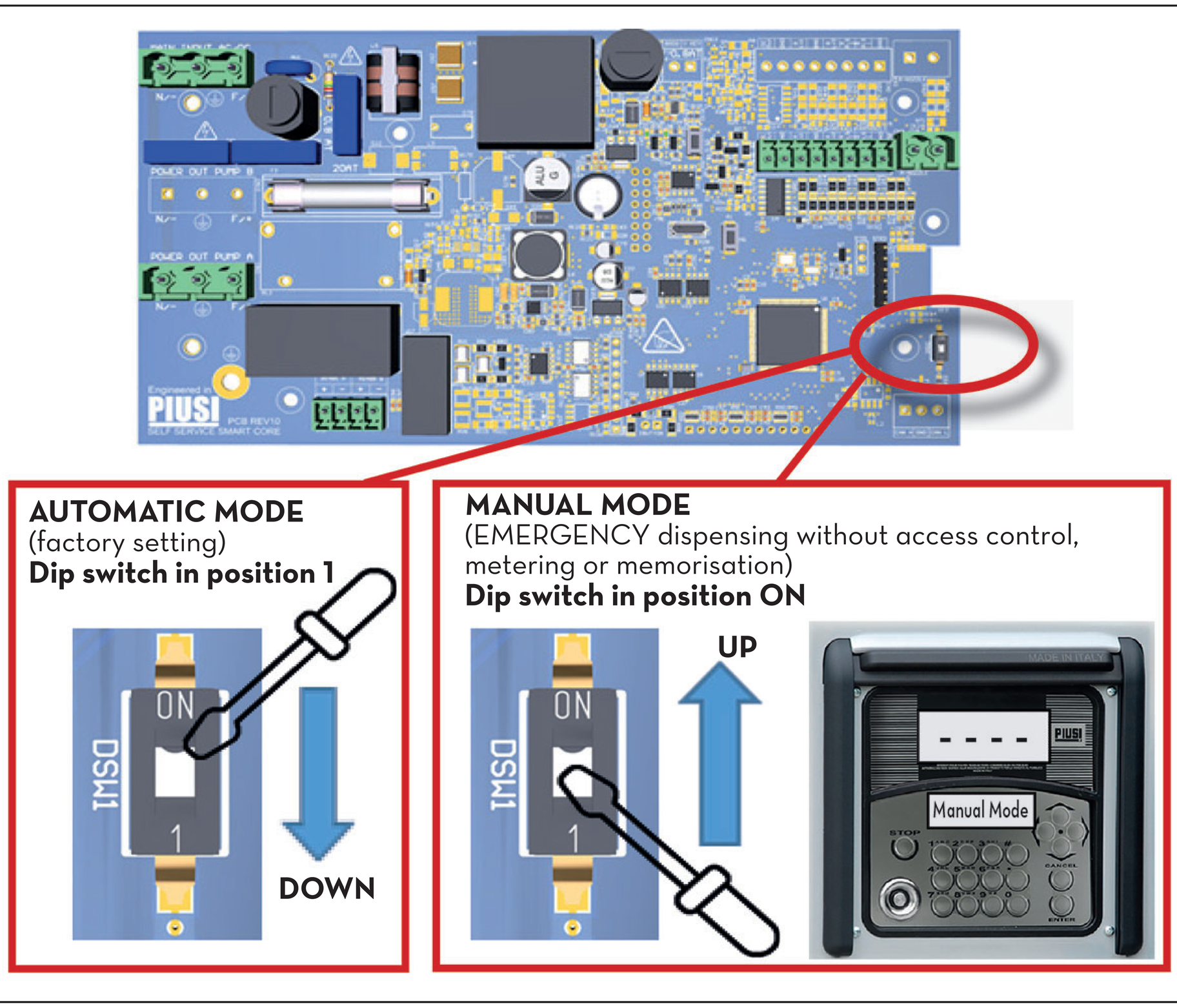

This manual is the property of PIUSI S.p.A. Whole or partial reproduction of this manual is forbidden.

21 SCRAPPING AND DISPOSAL

FOREWORD

In case the system should be demolished, its parts must be given to companies specialised in industrial waste disposal and recycling; in particular:

PACKAGING DISPOSAL

The package is made of biodegradable cardboard that can be consigned for sorted waste collection.

DISPOSAL OF METAL PARTS

The metal components, both painted and in stainless steel, are usually recycled by companies that are specialised in the metal-scrapping industry.

DISPOSAL OF ELECTRICAL AND ELECTRONIC EQUIPMENT

Disposal of waste electrical and electronic equipment must be handled by specialised recycling and disposal companies in compliance with the provisions of directive 2012/19/EU.
It is strictly prohibited to discard waste electrical and electronic equipment (WEEE) as household waste. Such wastes must be disposed of separately.
Any hazardous substances in the electrical and electronic appliances and/or the misuse of such appliances can have potentially serious consequences for the environment and human health.
Unlawful disposal of WEEE may result in application of the penalties provided for in law.

ENVIRONMENTAL INFORMATION FOR CUSTOMERS RESIDENT IN THE EUROPEAN UNION

European Directive 2012/19/EU requires that equipment bearing this symbol on the product and/or its packaging must not be disposed of with unsorted municipal waste.

The symbol indicates that this product must not be disposed of as household waste. It is your responsibility to dispose of this and other electric and electronic equipment via designated collection facilities appointed by the government or local authorities.

DISPOSAL OF OTHER PARTS

The disposal of other parts such as pipes, rubber seals, plastic components and cables should be entrusted to companies specialised in the disposal of industrial wastes.

22 REPLACEMENT PARTS TABLE

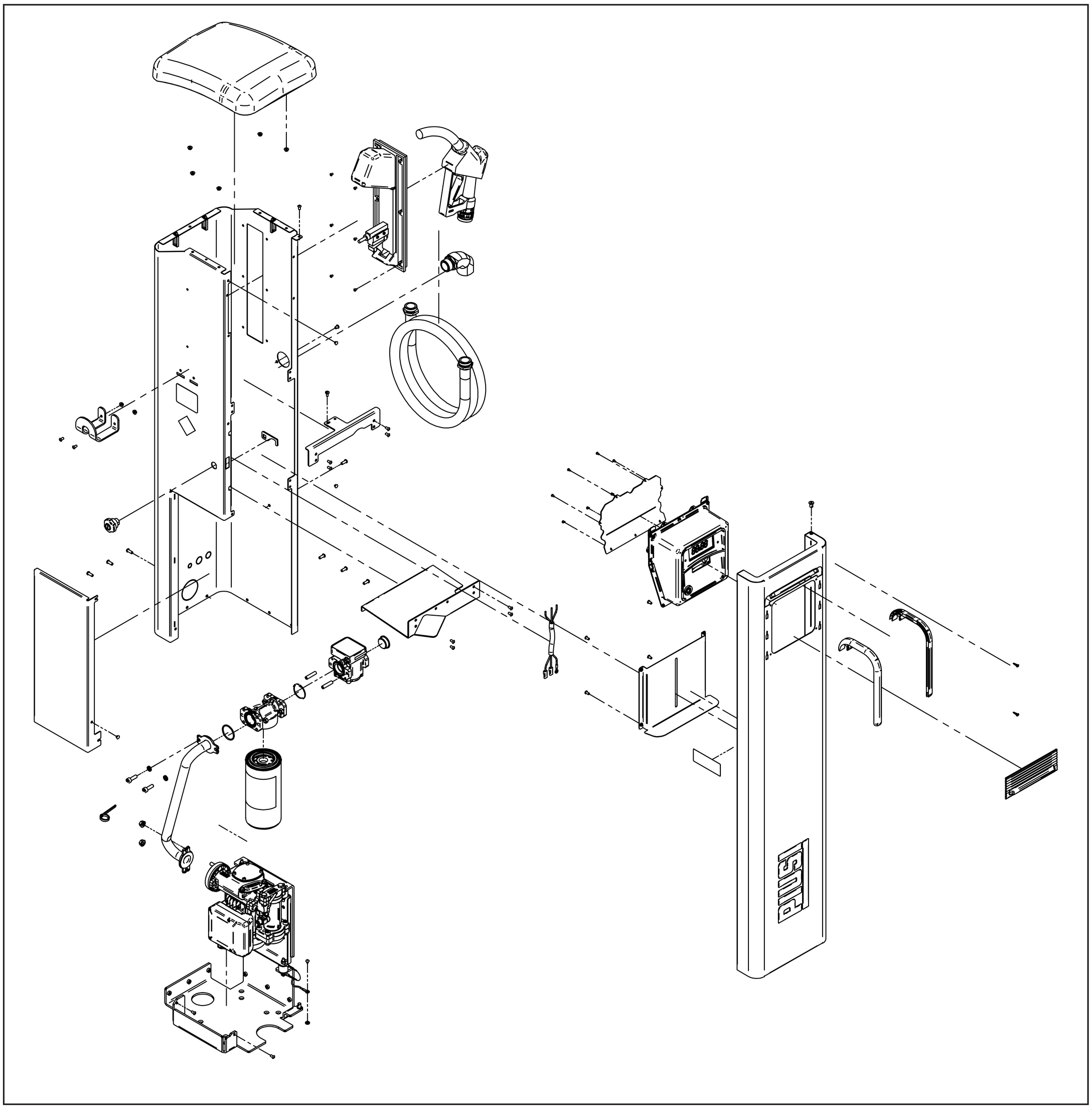

This manual is the property of PIUSI S.p.A. Whole or partial reproduction of this manual is forbidden.

© PIUSI S.p.A.

EN This document has been drawn up with great care concerning the accuracy of the data contained herein. However, PIUSI S.p.A. rejects all liability for any mistakes and omissions.

PIUSI *Fluid Handling Innovation*

IT Scarica il manuale nella tua lingua!
EN Download the manual in your language!
CS Stáhnout příručku ve vašem jazyce!
DA Download manualen på dit sprog!
DE Laden Sie das Handbuch in Ihrer Sprache herunter!
ES ¡Descarga el manual en tu idioma!
FI Lataa käsikirja omalla kielelläsi!
FR Téléchargez le manuel dans votre langue!
NL Download de handleiding in uw taal!
PL Pobierz instrukcję w swoim języku!
PT Baixe o manual em seu idioma!
RU Загрузите руководство на вашем языке

https://www.piusi.com/support/search-manuals

piusi.com
PIUSI SpA • Suzzara MN Italy

BULLETIN M0653 EN_00

06.2023