OCIO LINK

MADE IN ITALY

Installation, Use, and Configuration Manual

EN

BULLETIN MO848EN_00

ENGLISH

BULLETIN MO848EN_00

EN

INDEX

1	**FACSIMILE COPY OF EU DECLARATION OF CONFORMITY**	**5**
2	**DEVICE AND MANUFACTURER IDENTIFICATION**	**6**
3	**GENERAL WARNINGS**	**9**
4	**SAFETY INSTRUCTIONS**	**10**
5	**FIRST AID INSTRUCTIONS**	**12**
6	**SAFETY REGULATIONS**	**13**
7	**PACKING**	**13**
7.1	PACKAGE CONTENTS / PRELIMINARY INSPECTION	13
7.2	PACKAGE CONTENTS	14
7.2.1	Main Components	14
8	**TECHNICAL SPECIFICATIONS**	**14**
9	**PRODUCT DESCRIPTION**	**15**
9.1	WHAT IS PIUSI OCIO LINK	15
9.2	WEB CONFIGURATION INTERFACE	15
9.3	DESCRIPTION OF THE LEDs	16
9.4	INTENDED USE	16
10	**INSTALLATION**	**17**
10.1	INSTALLATION PREREQUISITES	17
10.2	INSTALLATION OF OCIO Link	18
10.3	WIRING	19
11	**CONFIGURATION**	**23**
11.1	HARDWARE CONFIGURATION MODE	23
11.2	SOFTWARE CONFIGURATION	25
11.3	FIRST ACCESS AND CONNECTION TO THE DEVICE	26
11.3.1	Connecting to the Device Network	26
11.4	OPENING THE WEB INTERFACE AND LOGIN	28
11.5	FIRST LOGIN WIZARD: SECURITY AND REBOOT	29
11.5.1	Changing the Ocio Link password (web interface)	29
11.5.2	Changing the Wi-Fi hotspot password	30
11.5.3	Restarting the device and reconnecting	31
11.6	POST-LOGIN MAIN SCREEN	32
11.6.1	Header Information	32
11.6.2	Header Information	32
11.7	CONNECTION TO THE OCIO LINK CLOUD	33
11.7.1	Obtaining Cloud Credentials	33
11.7.2	Entering credentials	33
11.7.3	Uploading credentials from a CSV file (recommended)	33
11.8	Internet connection configuration	34
11.8.1	Fundamental principle: only one method active	34
11.8.2	LAN (Ethernet) connection	34
11.8.3	Wi-Fi connection	36
11.8.4	4G connection (SIM)	38

11.9 OCIO SENSOR CONFIGURATION ON PORTS 40
11.9.1 Port Overview 40
11.9.2 Port configuration with Ocio 40
11.9.3 Door configuration with Ocio 2.0 (automatic detection) 41
11.10 SYSTEM SETTINGS 42
11.10.1 NTP Server 42
11.10.2 Web Interface Password Change (Post-Installation) 42
11.10.3 Changing the Wi-Fi hotspot password (post-installation) 43
11.11 VIEWING SYSTEM LOGS 43
11.11.1 When to view logs 43
11.11.2 Accessing Logs 43
11.11.3 Downloading logs 44
11.12 PUTTING INTO SERVICE 44
11.13 SAVING DOOR CONFIGURATION 44
12 FW UPDATE 45
12.1 UPDATE VIA MICROSD CARD 45
12.2 UPDATE VIA USB CABLE 46
13 DEMOLITION AND DISPOSAL 47
14 EXPLODED VIEW / DIMENSIONS 48

1 COPY OF EU DECLARATION OF CONFORMITY

The undersigned: PIUSI S.p.A.
Via Pacinotti 16/A - Industrial Zone . Rangavino - 46029 Suzzara - Mantua - Italy

DECLARES
under her own responsibility, that the equipment described below:
Description: **TANK MONITORING SYSTEM**
Model: **OCIO LINK**
Serial Number: refer to the Lot Number shown on the CE plate affixed to the product
Year of manufacture: refer to the year of manufacture shown on the CE plate affixed to the product.

complies with the following legislation:

- Electromagnetic compatibility
- Low Voltage
- Electrical and electronic equipment
- Radio equipment

The technical file is available to the competent authority upon justified request at PIUSI S.p.A. or by sending a request to the email address: doc_tec@piusi.com.

THE ORIGINAL DECLARATION OF CONFORMITY IS PROVIDED SEPARATELY WITH WITH THE PRODUCT

2 DEVICE AND MANUFACTURER IDENTIFICATION

Background

OCIO Link is equipped with a single product identification plate affixed externally that displays the following information:

- Manufacturer data
- Internal router serial number
- Model;
- CE mark
- Lot number
- Year of manufacture;

CAUTION

Always verify before installation that the model is correct and suitable for the actual power supply available (Voltage / Frequency). Ensure that the nameplate does not deteriorate or become detached over time.

NOTE

If this situation should occur, please contact our customer service office to have the damaged or missing plates sent to you, so that they can be reapplied where originally intended.

THE FOLLOWING LABELS ARE PRESENT:

PLATE WITH COMMUNICATION

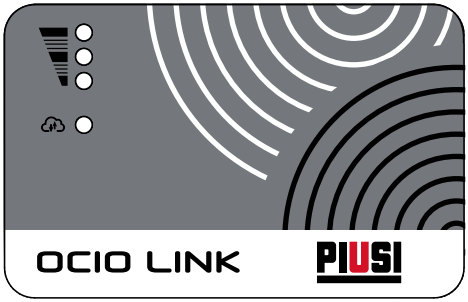

DATA PLATE

PLATE PRODUCT KEY

PRODUCT KEY

1111222233334444

PLATE MAC ADDRESS

MAC LAN: A1:B2: C3:D4: E5:F6

MAC WIFI: G7:H8: I9:L0: M1:N2: O3

SN: 1234567890ABC BOARD CODE: 027216000

SSID: OCIOLINK_F6 PW WiFi: PASSWORDWIFI

USER CGI: NOMEUTENTECGI

PW CGI: PASSWORDCGI

PLATE FIRST CONNECTION

PLATE PACKAGING (applied on the outside of the box)

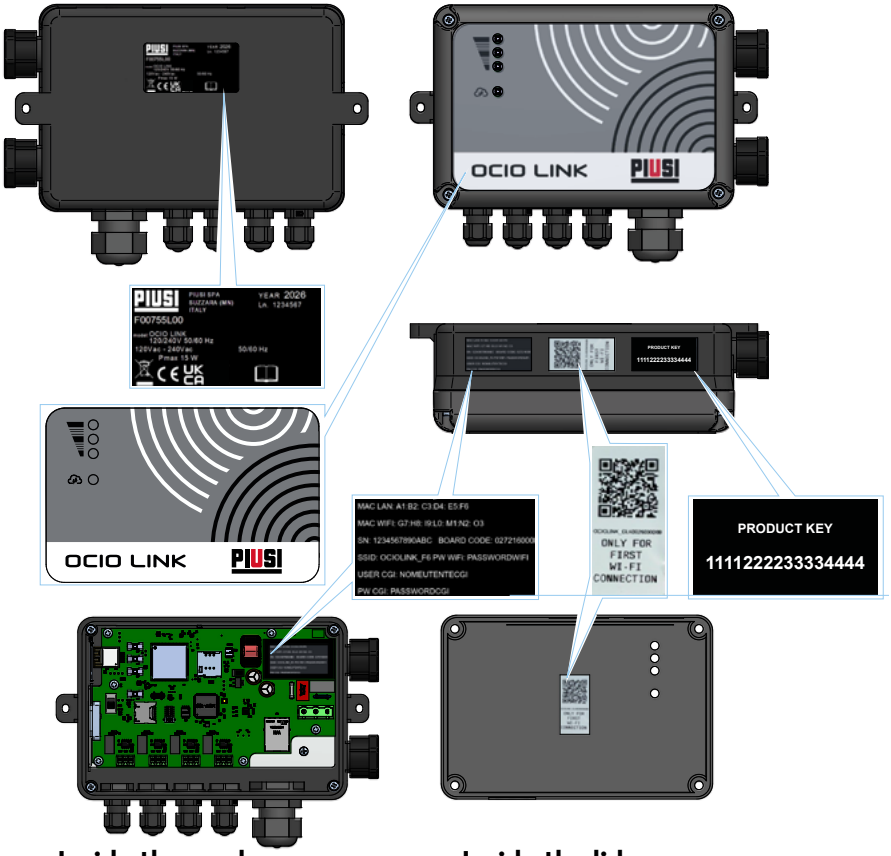

Inside the card **Inside the lid**

NOTE

The QR code is intended to speed up the process of connecting to the router via Wi-Fi without entering credentials.

3 GENERAL WARNINGS

Important Warnings

To safeguard the safety of operators, to avoid possible damage, and before carrying out any operation, it is essential to have familiarized yourself with the entire instruction manual.

Symbology used in the manual

The following symbols will be used in the manual to highlight particularly important indications and warnings:

CAUTION

This symbol indicates accident prevention regulations for operators and/or any exposed persons.

WARNING

This symbol indicates that there is a possibility of damage to equipment and/or its components.

NOTE

This symbol indicates useful information.

Storage of the manual

This manual must be intact and readable in its entirety, the end user and the specialized technicians authorized for installation and maintenance must be able to consult it at all times.

Playback reproduction

All reproduction rights of this manual are reserved by Piusi S.p.A. The text may not be used in other printed matter without written permission from Piusi S.p.A.

© Piusi S.p.A.

THIS MANUAL IS THE PROPERTY OF PIUSI S.p.A.

ANY REPRODUCTION, EVEN PARTIAL, IS PROHIBITED.

This manual is the property of Piusi S.p.A., which is the exclusive owner of all rights under applicable laws, including but not limited to copyright regulations. All rights arising from such regulations are reserved to Piusi S.p.A.: The reproduction, even partial, of this manual, its publication, modification, transcription, communication to the public, distribution, commercialization in any form, translation and/or adaptation, lending, and any other activity reserved by law to Piusi S.p.A.

4 SAFETY INSTRUCTIONS

INSPECTION AND MAINTENANCE OF THE ELECTRICAL NETWORK PRE-INSTALLATION CHECKS

CAUTION	**ABSOLUTELY AVOID CONTACT BETWEEN THE POWER SUPPLY AND THE LIQUID TO BE PUMPED.** **DISCONNECT THE POWER SUPPLY BEFORE PERFORMING ANY INSPECTION OR MAINTENANCE**
FIRE AND EXPLOSION	**When flammable liquids are present in the work area, flammable vapors may be present which, during use of the station, can cause a fire or explosion.** **To prevent fire and explosion hazards:**
	The device is not explosion-proof **The device must be installed outside of areas at risk of explosion.** **Do not install in areas where flammable vapors may be present**
	• Use the station only in well-ventilated areas; • Keep the work area free of debris, including processing waste and containers of solvents or gasoline; • Do not plug in or unplug the power cord or operate the switch in the presence of flammable vapors; • All devices in the work area must be grounded; • Immediately stop all work if sparks or an electric shock occur. Do not use the station until the problem has been identified and resolved; • Keep a working fire extinguisher in the work area.

EN

SHOCK Electrocution or death		This product must be grounded. Improper installation or use, may cause danger of electrocution. • Before each use, check that the power cord is not damaged. Have the power cord replaced immediately if it is damaged; • Turn off the unit and unplug the power cord after use; • Do not expose to rain. Install in a sheltered location; • Do not turn on the unit if the power cord or any major parts of the appliance are damaged. Have damaged parts replaced by qualified personnel before use; • The connection must be kept away from water; • As a general electrical safety rule, it is always recommended to power the device by protecting the line with: - a circuit breaker with a current rating appropriate for the electrical line; - a 30 mA residual current device (RCD); • The electrical connection must include a ground fault circuit interrupter (GFCI); • Installation operations are performed with the box open and electrical contacts accessible. All these operations must be performed with the device disconnected from the electrical grid to avoid the risk of electric shock; • Maintenance of electrical components may only be performed by qualified electrical or electronic technicians; • Wear electrician's gloves; • Before performing any maintenance, ensure the device is disconnected from the power line to turn it off and isolate it from the electrical network; • If the device is sold without a cable, ensure periodic inspection of the grounding circuit in accordance with applicable regulations.

IMPROPER IMPROPER USE OF THE DEVICE	IMPROPER USE OF THE DEVICE CAN CAUSE SERIOUS INJURY OR DEATH • Do not operate the unit when you are tired or under the influence of drugs or alcohol; • Do not leave the work area while the device is turned on or in operation; **It is recommended that you:** • Turn off the device when not in use; • Do not alter or modify the equipment. Alterations or modifications to the equipment may void certifications and pose safety hazards; • Keep hoses and power cords away from walkways, sharp edges, moving parts, and hot surfaces; • Keep children and pets away from the work area; • Comply with all applicable safety regulations; • Inspect the equipment daily. Immediately repair or replace worn or damaged parts using only the manufacturer's original replacement parts; • Ensure that the device is classified and approved in accordance with the regulations for the environment in which it is used; • Use the device only for its intended purpose. Contact your distributor for more information;

5 FIRST AID INSTRUCTIONS

PERSONS AFFECTED BY ELECTRIC SHOCKS	Disconnect power, or use a dry insulator for protection in moving the injured person away from any conductor. Avoid touching the injured person with bare hands until the injured person is away from any conductor. Seek the help of trained and qualified persons immediately. Do not work on the switches with wet hands.
PROHIBITED SMOKING	DO NOT SMOKE NEAR THE DEVICE DO NOT USE NEAR OPEN FLAMES

EN

6 SAFETY REGULATIONS

ESSENTIAL CHARACTERISTICS OF PROTECTIVE EQUIPMENT

Wear protective equipment that is:
- suitable for the operations to be performed;
- resistant to the products used for cleaning.

PERSONAL PROTECTIVE EQUIPMENT WEAR

Safety shoes;

Tight-fitting clothing;

Protective gloves;

Safety goggles;

OTHER DEVICES

Instruction manual

7 PACKING

The device is supplied packaged in a cardboard box bearing the following information:
1 - contents of the package
2 - weight of contents
3 - description of the product

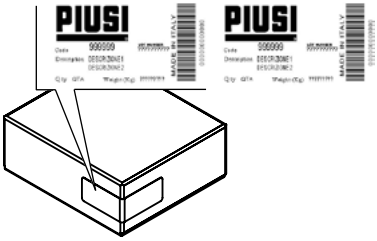

7.1 PACKAGE CONTENTS / PRELIMINARY INSPECTION

Background To open the package, use scissors or a box cutter.

NOTE

If one or more of the components described below are not included in the package, contact Piusi S.p.A. technical support.

CAUTION

Check that the nameplate data correspond to the desired specifications. For any anomaly, immediately contact the supplier, indicating the nature of the defects and, in case of doubt about the safety of the equipment, do not use it.

7.2 PACKAGE CONTENTS

7.2.1 Main Components

The PIUSI OCIO LINK kit typically includes:

- OCIO LINK device (gateway).
- AC power supply.
- Ethernet cable (for LAN connection).
- Label with serial number and default login credentials attached to the power supply
- External label with the product key
- Quick start guide.

NOTE Check for the presence of a SIM card (for 4G connection) or additional cables for Ocio sensors, depending on the required configuration.

8 TECHNICAL SPECIFICATIONS

OCIO Link DIMENSIONS (mm)		PACKING DIMENSIONS (mm)	
Width (A)	210	**Width (A)**	**280**
Depth (B)	65	**Depth (B)**	**160**
Height (C)	140	**Height (C)**	**140**
		Total Weight:	**0,7 Kg**

Technical Specifications	
Voltage	120 - 240 V
Frequency	50 / 60 Hz
Maximum power	15 W
Protection rating	IP 55

EN

9 PRODUCT DESCRIPTION

9.1 WHAT IS PIUSI OCIO LINK

PIUSI OCIO LINK is an industrial gateway designed to connect the Ocio family of level sensors to the PIUSI Ocio Link Cloud service. The device collects data from sensors connected to the available ports, processes it locally, and securely transmits it to the cloud for remote monitoring and analysis.
Ocio Link is a solution that allows you to connect up to 4 OCIO and/or OCIO 2.0 level indicators via RS-485 to the Piusi web app for remote management. Ocio Link can connect to the cloud via a wired LAN connection, 2.4 GHz Wi-Fi, or 4G LTE.

9.2 WEB CONFIGURATION INTERFACE

The OCIO LINK device features a built-in web interface, accessible via a browser, which allows the installer or maintenance technician to:

- Configure the Internet connection (LAN, Wi-Fi, or 4G).
- Enter credentials for connecting to the cloud.
- Manage up to 4 Ocio ports (level sensors).
- Modify system settings (NTP server, security password).
- View system logs to diagnose any issues.
- The interface is designed for local use: the technician connects to the device's network (typically via Wi-Fi hotspot or LAN) and accesses the configuration web page.

SUPPORTED DEVICES:
• OCIO
• OCIO 2.0

9.3 DESCRIPTION OF THE LEDs

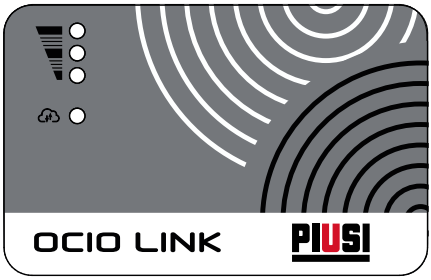

LEDS	COLOR	STATUS	DESCRIPTION
	RSSI LED	THREE GREEN	Maximum WiFi/4G signal strength
		TWO YELLOW	Medium WiFi/4G signal strength
		ONE YELLOW	Minimum WiFi/4G signal strength
		ONE FLASHING YELLOW	No usable signal
	CLOUD LED	SOLID GREEN LED	Ocio link connected to the internet
		SOLID BLUE LED	Ocio Link connected to the Cloud
		BLUE LED FLASHING	Data transfer in progress
		SOLID RED LED	Error, contact CGI and check the issue

9.4 INTENDED USE

CORRECT USE:

- LAN, WiFi, and 4G data transmission regarding level changes in OCIO and OCIO 2.0 devices, in accordance with the settings configured.

REASONABLY FORESEEABLE INCORRECT USE:

- Anything not explicitly mentioned under “correct use”
- Data transmission via 4G regarding operations performed with devices other than those intended
- Tampering with the device;
- Opening the case without disconnecting the power supply;

EN

10 INSTALLATION

10.1 INSTALLATION PREREQUISITES

- Stable power supply.
- Internet connection available (via LAN, Wi-Fi, or 4G mobile network).
- Ocio Link cloud access credentials (Access Key and Secret Access Key), obtainable through the "New Ocio Link" registration procedure in the PIUSI cloud web application.
- Up-to-date web browser (Chrome, Firefox, Edge, Safari).
- Ocio or Ocio 2.0 sensors to connect to available ports (if already included in the installation).

NOTE

The OCIO Link can be wall-mounted or mounted directly on the equipment.
Pay attention to the length of the cables. Follow the instructions described in **Chapter 9.3.**

INSTALLATION PRECAUTIONS

Installation inside metal enclosures or heavily shielded environments can significantly reduce the device's performance when using a Wi-Fi or 4G-LTE connection and compromise the GNSS ("Global Navigation Satellite System") function.

CAUTION

Installation operations shall be done with open box and accessible electrical contacts. All these operations must be done with device isolated from the power supply to avoid danger of electrocution!
All of the following operations must be performed by qualified electrical or electronic personnel.

The use of unsuitable accessories not supplied with the system is strictly prohibited. Piusi S.p.A. declines all liability for damage to persons, property, or the environment resulting from failure to comply with this requirement.

INSTALL THE DEVICE WITH THE CABLE PASSAGES FACING DOWNWARD AND PROVIDE A PROTECTIVE COVER.

10.2 INSTALLATION OF OCIO Link

The OCIO Link must be wall-mounted.

For wall mounting, drill . 2 holes with a diameter of 6 mm for M4 anchors.
For mounting on surfaces other than masonry, drill appropriate holes, following the dimensions indicated in the diagram.

1. Use the through-holes on the box to install the OCIO Link case directly on a wall

CAUTION

SCREWS FOR MOUNTING THE CASE TO THE WALL ARE NOT INCLUDED.
The installer is responsible for selecting the appropriate M4 screws for the installation location.

2. Proceed with the wiring as described in section 9.3

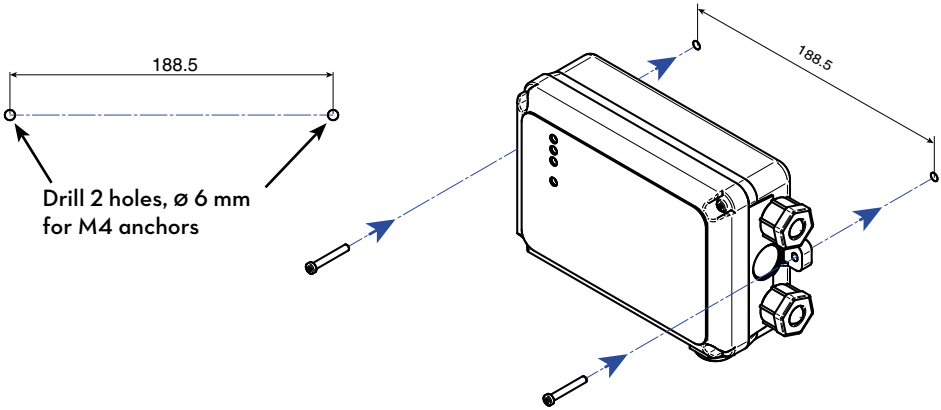

10.3 WIRING

ACCESS TO THE BOARD

Disconnect the power supply and remove the front cover by loosening the 4 mounting screws.

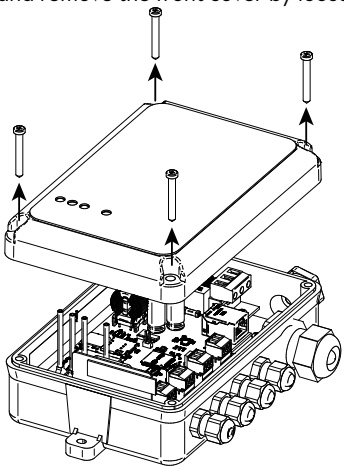

WIRING OVERVIEW

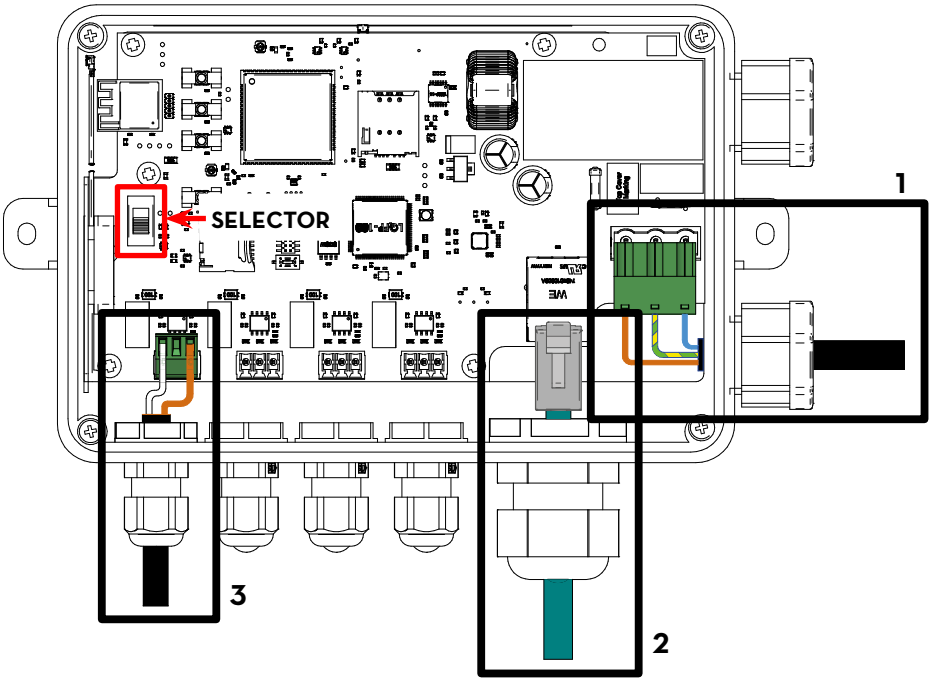

1 POWER CABLE

Wire the OCIO LINK power supply line with a two-conductor cable with a minimum cross-section of 3x0.5mm·

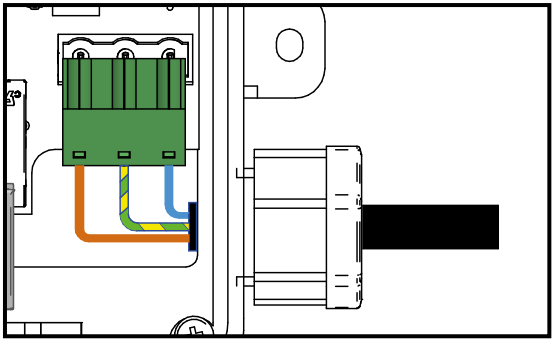

2 LAN WIRING

For LAN connectivity, remove the corresponding PG cap and insert the RJ45 connector.

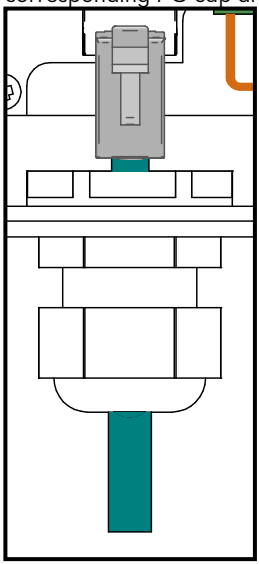

CAUTION **Use cables with RJ45 connectors without protective covers.**

EN

3 RS485 WIRING

Connect the opposite end of the RS-485 cable to one of the 4 RS-485 ports on the OCIO LINK board according to the wiring diagram shown in the figure (insert detail of an RS-485 terminal on the OCIO LINK board). +RS485 on the left, -RS485 on the right.
For the connection, use a twisted-pair cable with a 22-24 AWG gauge and a characteristic impedance of 120 Ohms

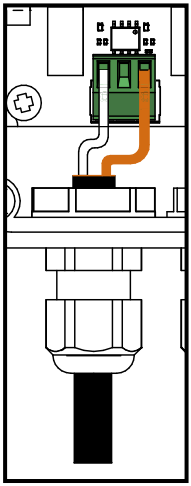

OCIO / OCIO 2.0

Connect the
RS-485 cable as shown in the photo.
The power supply forOCIO Link must be provided separately from that of OCIO or OCIO 2.0

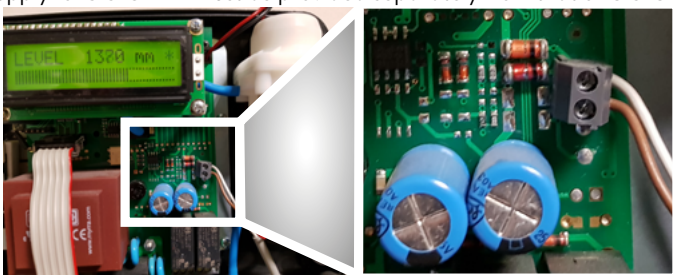

- The + RS-485 terminal is located at the top (display side)
- The - RS-485 terminal is located at the bottom, on the cable entry side

SIM INSTALLATION (if applicable)

Insert the SIM into the OCIO Link using slot 1

The data traffic generated by the system varies depending on the system configuration and usage. It is recommended to purchase a data plan that covers at least 50MB of data per month.

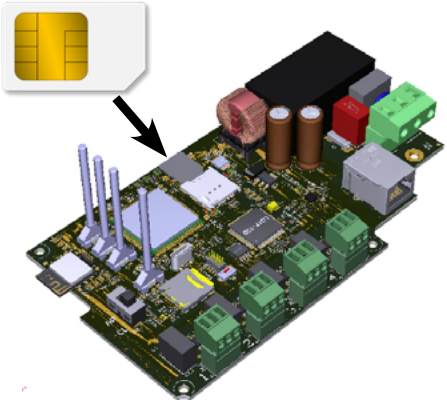

11 CONFIGURATION

11.1 HARDWARE CONFIGURATION MODE

EN

ACCESS TO THE BOARD

Disconnect the power supply and remove the front cover by loosening the 4 mounting screws.

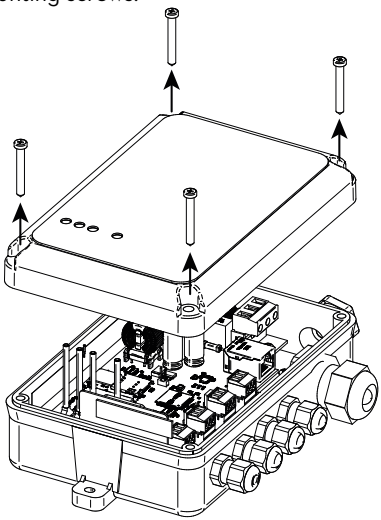

SELECTOR

OCIO link has a selector switch for setting the two basic operating modes:

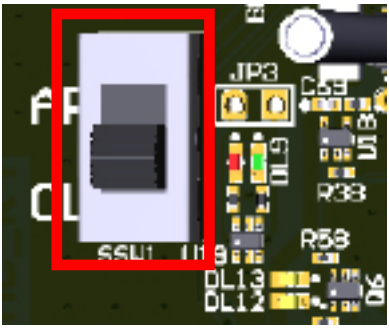

Select the correct operating mode according to the instructions in section 10.2.

Once configuration is complete, close the cover.

NOTE:
To ensure the **IP55**
, tighten the cover screws to a torque of **1.1 Nm**

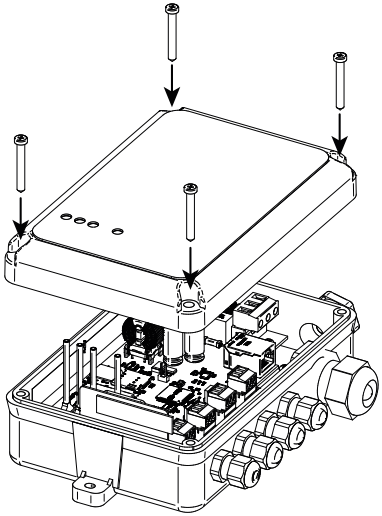

EN

11.2 SOFTWARE CONFIGURATION

You can choose between two different configurations:

AP Mode:
Point-to-point WiFi connection mode for setting initial configurations; connection mode for modifying existing configurations. In AP mode, a configured OCIO LINK suspends the automatic sending of levels to the Cloud and generates a WiFi network with DHCP (WiFi only) to allow the user to establish a point-to-point connection (WiFi or LAN), access the Web Server, and modify configurations. Changes and modifications will be saved when the "Save" button is pressed and applied upon the next reboot in client mode.

CLIENT Mode:
In the device's standard operating mode, OCIO Link is connected to the Cloud via 4G or to a Wi-Fi or wired LAN network; alternatively, if OCIO Link reports a configuration issue, you must connect via LAN (if available) or restart AP mode to make the necessary changes. In CLIENT mode, you can always access the web server and make changes to the configurations; these changes will be saved and applied automatically when you press the "Save & Reboot" button.

CAUTION

For electrical safety reasons, the switch between modes must be performed with the device powered off.
Position changes made while the device is powered on will be ignored.

NOTE

IMPORTANT: You can press the "Save" button (AP mode) or "Save & Reboot" button (CLIENT mode) only after entering the minimum configuration settings required to access the Cloud, i.e., after entering your Cloud login credentials, properly setting up a local network or 4G connection, and connecting at least one Ocio to one of the 4 ports.

11.3 FIRST ACCESS AND CONNECTION TO THE DEVICE

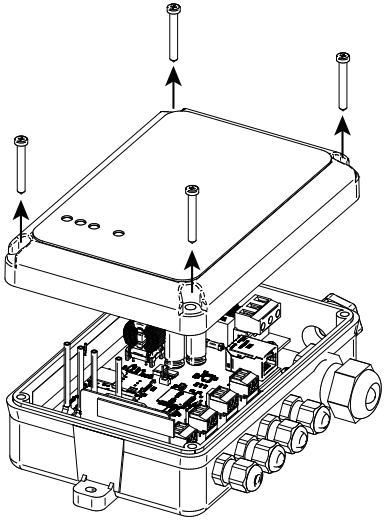

1. Disconnect the device from power and remove the 4 screws securing the cover;
2. Ensure the device is in AP mode by setting the switch accordingly;

11.3.1 Connecting to the Device Network

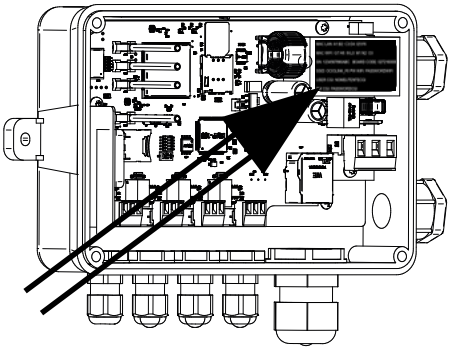

3. Connect point-to-point to the device via a LAN cable or by connecting to the generated Wi-Fi network, using the default password indicated on the label;

EN

Upon first startup, OCIO LINK creates a Wi-Fi hotspot with the SSID and password indicated on the device's internal label.

1. Open the Wi-Fi settings on your computer or mobile device.
2. Search for the Wi-Fi network with the SSID corresponding to the OCIO LINK device (e.g., OCIOLINK-CLKXXXXXXXXXX).
3. Connect using the password shown on the internal label.

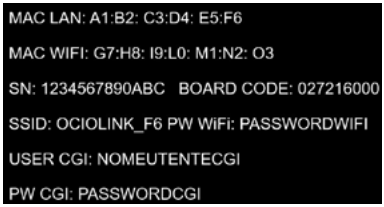

LAN Alternative: If you have connected the device via an Ethernet cable, you can access the web interface directly from the local network (check the IP address assigned by the router or use the default address if documented).

11.4 OPENING THE WEB INTERFACE AND LOGIN

1. Open a web browser (Chrome, Firefox, Edge, Safari).
2. Type the URL indicated on the internal label or in the quick start guide into the address bar (typically http://192.168.4.1 or the device's local IP address if it has already been configured on a network previously).
3. The login screen appears.

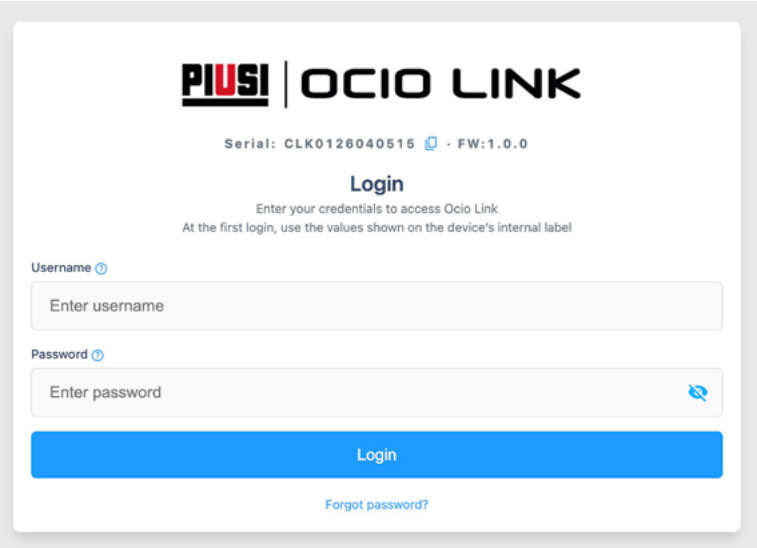

4. Enter the Username and Password shown on the device's internal label.
5. Click the Login button.

NOTE

Upon first login with the default credentials, the interface will prompt you to change your password immediately for security reasons (mandatory wizard).

11.5 FIRST LOGIN WIZARD: SECURITY AND REBOOT

11.5.1 Changing the Ocio Link password (web interface)

After the first login, the interface displays the **Change your Ocio Link Password.**

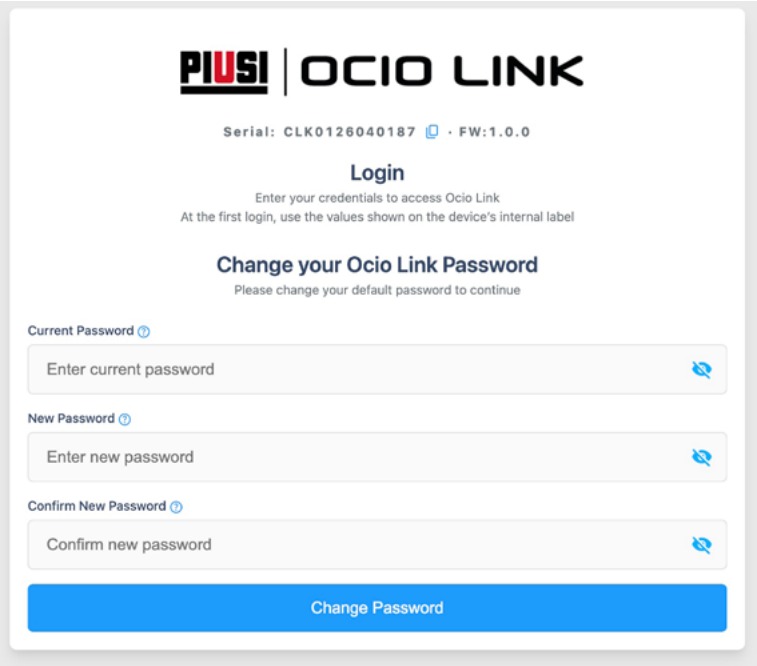

1. In the Current Password field, enter the default password used to log in.
2. In the New Password field, enter a strong new password (we recommend at least 8 characters, including uppercase letters, lowercase letters, numbers, and symbols).
3. In the Confirm New Password field, re-enter the new password.
4. Click the Change Password button.

The interface confirms the operation and may ask you to log in again using the new password.

11.5.2 Changing the Wi-Fi hotspot password

Immediately after changing the interface password, the interface displays the **Change WiFi Password wizard.**

1. In the Current Password field, enter the default Wi-Fi password (the one shown on the internal label for the hotspot).
2. In the New Password field, enter a new password for the device's Wi-Fi access point.
3. In the Confirm New Password field, re-enter the new password.
4. Click the Change WiFi Password button.

11.5.3 Restarting the device and reconnecting

After changing the Wi-Fi password, the system displays a warning message:

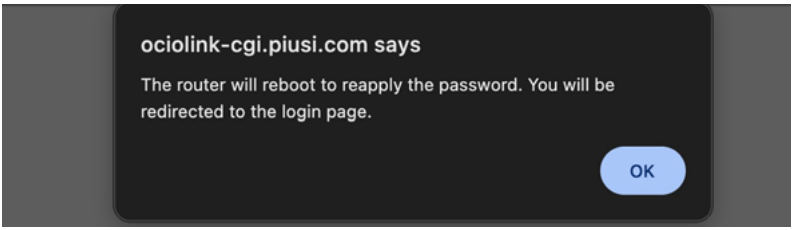

Message: "The router will reboot to reapply the password. You will be redirected to the login page."

- What to expect:
- The device will automatically restart to apply the new Wi-Fi password.
- Your current Wi-Fi connection will be interrupted.
- Wait 1–2 minutes for the device to complete the reboot.
- Reconnect to the device's Wi-Fi network using the new Wi-Fi password you just set.
- Open your browser again and go to the web interface address.
- Log in using the new web interface password set in the previous step.

WARNING During the reboot, the device will be unreachable. Do not turn off or disconnect the device during this phase.

11.6 POST-LOGIN MAIN SCREEN

After completing the wizard and logging in again, you will be taken to the web interface's main screen.

11.6.1 Header Information

At the top of the screen, you will see:

- Device serial number (e.g., Serial: CLK0126049701).
- Firmware version (e.g., FW:1.0.0).
- Global action buttons:
    - **Reload Data:** Reloads the current configuration from the device (useful if you suspect that the displayed settings are not up to date).
    - **Save & Reboot:** Saves the changes made and reboots the device to apply them. This button is essential: many changes (e.g., Internet, cloud, Ocio settings) require a reboot to take effect.

11.6.2 Header Information

The interface is organized into **five main tabs:**

1. **Ocio Link Cloud** – Connection to the cloud service (Access Key and Secret Access Key credentials).
2. **Internet** – Configure Internet connection method (LAN, Wi-Fi, 4G).
3. **Ocio** – Ocio port and sensor management (up to 4 ports).
4. **Settings** – System settings (NTP, password change).
5. **Logs** – View system logs for diagnostics.

The Logout button is located at the bottom right to safely log out of the interface.

EN

11.7 CONNECTION TO THE OCIO LINK CLOUD

11.7.1 Obtaining Cloud Credentials

Before configuring the device, you must have:

- **Ocio Link Access Key**
- **Ocio Link Secret Access Key**

These credentials are obtained by registering a new Ocio Link via the PIUSI cloud service web application. Follow the “New Ocio Link” registration procedure outlined in the cloud documentation to generate the keys.

11.7.2 Entering credentials

1. Click on the **Ocio Link Cloud tab.**

2. Read the instructions provided:

“Enter the credentials to connect Ocio Link to Ocio Link Cloud.
The credentials are generated within the Ocio Link Cloud. Follow the ‘New Ocio Link’ registration procedure in the web app to obtain these values. If you lose them or wish to change them, you can request new ones directly from the Ocio Link Cloud.”

3. In the Ocio Link Access Key field, enter the access key provided by the cloud.
4. In the Ocio Link Secret Access Key field, enter the secret key.

11.7.3 Uploading credentials from a CSV file (recommended)

Log in to your site and add the Ocio Link. Once the setup is complete, you can download a CSV file containing the credentials.
We recommend uploading the CSV file to the interface using the button provided. Click the "Upload credentials from CSV" button and select the corresponding CSV file. The system will automatically fill in the fields.

11.8 Internet connection configuration

11.8.1 Fundamental principle: only one method active

Important rule:
You can enable only one primary connection method at a time: LAN, Wi-Fi, or 4G. If you change the method, deactivate the previous one and activate only the desired one. The interface displays this message on the Internet tab:

"Choose one connection method to get your Ocio Link online. Note: Only one primary connection method can be active at a time"

11.8.2 LAN (Ethernet) connection

If the device is connected via an Ethernet cable:

1. Click on the Internet tab.
2. In the Connection Type menu, select LAN Connection.

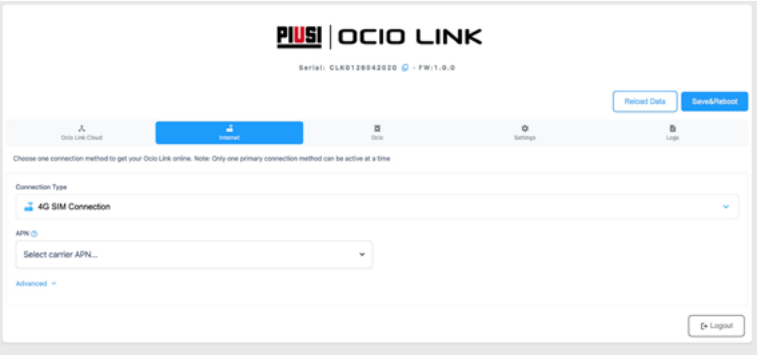

EN

3. Click **Advanced** to expand the advanced options.

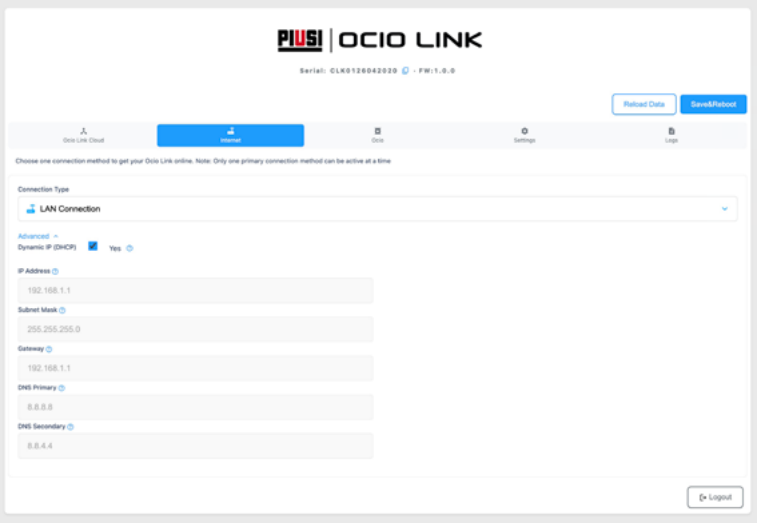

4. Dynamic IP (DHCP): If the checkbox is selected ("Yes"), the device automatically obtains the IP address, subnet mask, gateway, and DNS from the local network (recommended configuration for most networks).
5. Static IP: If you want to manually assign network parameters, uncheck the DHCP box and fill in the fields:

- IP Address: The device's static IP address (e.g., 192.168.1.100).
- Subnet Mask: Subnet mask (e.g., 255.255.255.0).
- Gateway: IP address of the gateway/router (e.g., 192.168.1.1).
- Primary DNS: Primary DNS server (e.g., 8.8.8.8 for Google DNS).
- Secondary DNS: Optional secondary DNS server (e.g., 8.8.4.4).

NOTE

After restarting, if you have set a static IP, you will need to reconnect to the new IP address to access the interface again.

11.8.3 Wi-Fi connection

If you want to connect OCIO LINK to an existing Wi-Fi network (e.g., corporate or home network):

1. Click on the Internet tab.
2. In the Connection Type menu, select WiFi Connection.

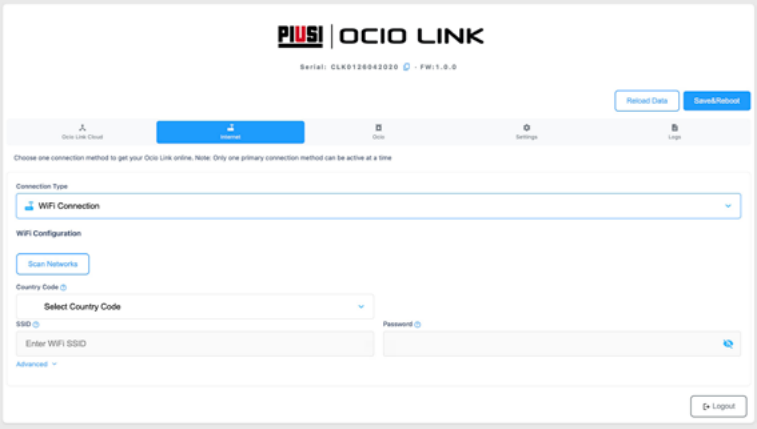

3. Click the Scan Networks button to start searching for available Wi-Fi networks in the vicinity.
4. Select the Country Code from the drop-down menu (e.g., IT for Italy) to ensure compliance with local radio regulations.
5. In the SSID field, enter the name of the Wi-Fi network you want to connect to (or select it from the list after scanning).
6. In the Password field, enter the Wi-Fi network password.

EN

7. Click Advanced to expand the advanced options.

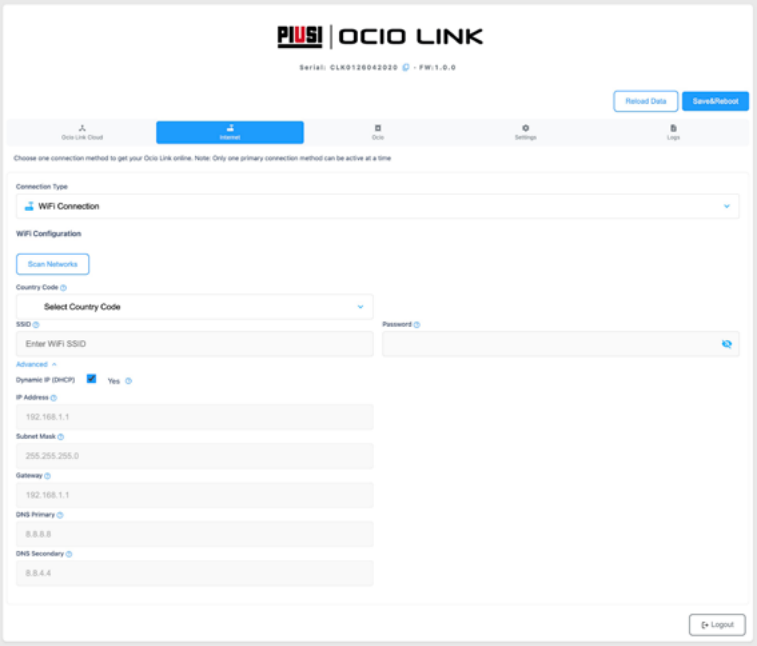

8. Dynamic IP (DHCP): If selected, the device will automatically obtain an IP address from the Wi-Fi network. If you want a static IP, deselect this option and fill in the IP Address, Subnet Mask, Gateway, Primary DNS, and Secondary DNS fields as described for the LAN.
9. After rebooting, the device will connect to the specified Wi-Fi network. To access the interface again, connect to the same Wi-Fi network and use the assigned IP address (check on the router or use network scanning tools), otherwise turn off the device and put it into AP mode.

NOTE

Once connected to the external Wi-Fi network, the device's hotspot may no longer be active or may operate in parallel access point mode (depending on the firmware version).

11.8.4 4G connection (SIM)

If you have a SIM card with an active data plan:

1. Insert the SIM into the device's SIM slot (do this while the device is turned off).
2. Turn on the device and access the web interface.
3. Click on the Internet tab.
4. In the Connection Type menu, select 4G SIM Connection.

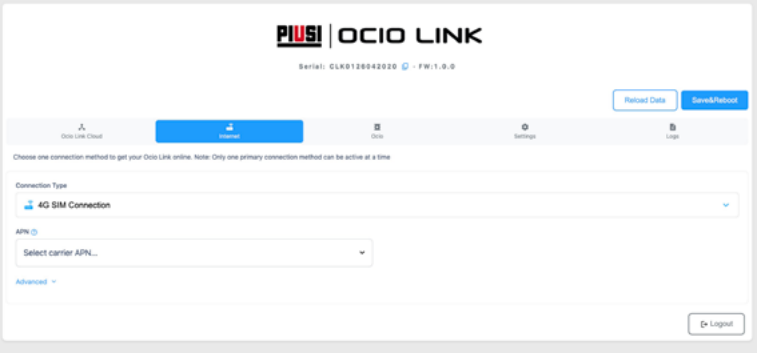

In the APN field, you can:

- Select the APN from the preloaded list (click the drop-down menu to view the list of carriers).

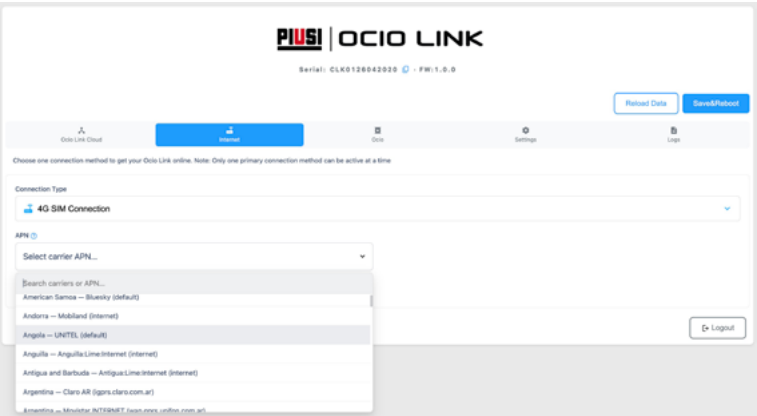

- Or manually enter the APN provided by your mobile carrier if it is not listed.

EN

5. Click on Advanced to expand the advanced options (if required by your carrier).

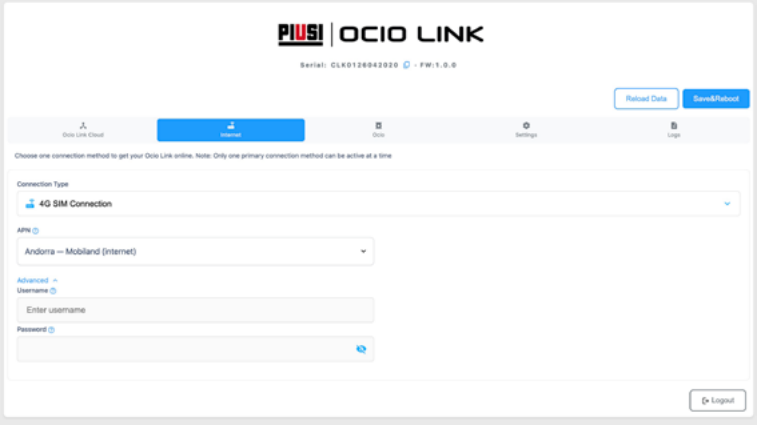

6. In the Username and Password fields, enter any credentials required by the carrier (if not required, leave them blank).

WARNING The 4G connection incurs data charges for the user. Check the data plan active on the SIM card.

11.9 OCIO SENSOR CONFIGURATION ON PORTS

11.9.1 Port Overview

The OCIO LINK device has 4 ports dedicated to Ocio sensors. Each port can be:

- Enabled or disabled via the “Enabled” checkbox.
- Configured for an Ocio sensor (requires manual entry of a 7-digit serial number) or Ocio 2.0 (automatic detection via the “Find” button).

11.9.2 Port configuration with Ocio

1. Click on the Ocio tab

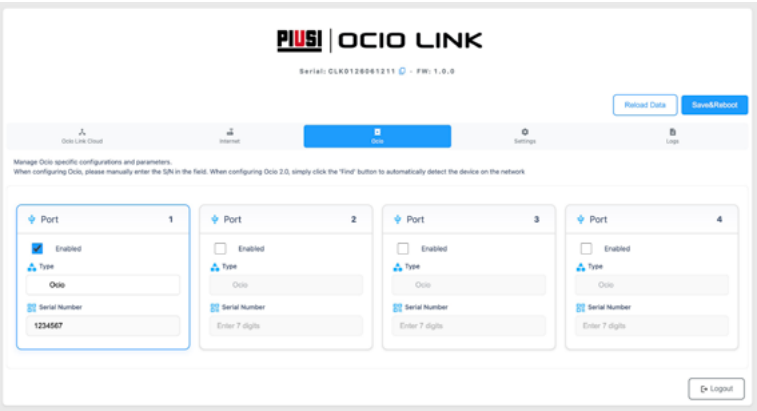

2. Select the desired port (e.g., Port 1).
3. Check the Enabled box to activate the port.
4. In the Type drop-down menu, select Ocio.
5. In the Serial Number field, manually enter the 7-digit serial number of the Ocio sensor connected to that port (to retrieve the serial number on the Ocio sensor, press the Cancel button. Refer to the OCIO sensor manual)

NOTE Ocio sensors require manual configuration of the serial number. Automatic detection is not available.

EN

11.9.3 Door configuration with Ocio 2.0 (automatic detection)

1. Click on the Ocio tab.
2. Select the desired port (e.g., Port 2).
3. Check the Enabled box.
4. In the Type drop-down menu, select Ocio 2.0

5. Click the Find button to start the automatic search for the sensor on the network.
6. The system automatically detects the serial number of the connected Ocio 2.0 sensor and enters it in the Serial Number field.

11.10 SYSTEM SETTINGS

11.10.1NTP Server

1. Click the Settings tab.

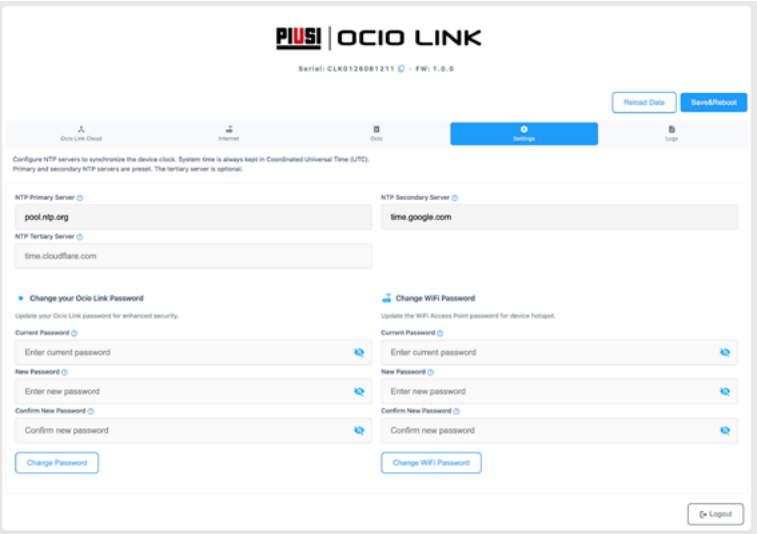

2. (Optional in case of problems) Check the NTP Primary Server, NTP Secondary Server, and NTP Tertiary Server fields. These servers are used to synchronize the device's internal clock. The default values are generally correct (e.g., pool.ntp.org, time.google.com, time.cloudflare.com). Change them only if required by your corporate network.

11.10.2 Web Interface Password Change (Post-Installation)

If you want to change the web interface password again at a later time:

1. In the Settings tab, locate the Change your Ocio Link Password section.
2. In the Current Password field, enter your current password.
3. In the New Password field, enter the new password.
4. In the Confirm New Password field, re-enter the new password.
5. Click the Change Password button.

WARNING After changing the password, you will need to log in again using the new password.

EN

11.10.3 Changing the Wi-Fi hotspot password (post-installation)

Similarly, if you want to change the Wi-Fi access point password for the device:

1. On the Settings tab, locate the Change WiFi Password section.
2. In the Current Password field, enter the current Wi-Fi password.
3. In the New Password field, enter the new Wi-Fi password.
4. In the Confirm New Password field, re-enter the new password.
5. Click the Change WiFi Password button.
6. The device will restart automatically. Reconnect to the hotspot using the new password.

NOTE This will temporarily interrupt your Wi-Fi connection. Wait for the device to fully restart before reconnecting.

11.11 VIEWING SYSTEM LOGS

11.11.1 When to view logs

System logs are useful for:

- Diagnosing connection issues (Internet, cloud, sensors).
- Check for error messages or alerts.
- Monitoring device activity during installation or maintenance.

11.11.2 Accessing Logs

1. Click the Logs tab.

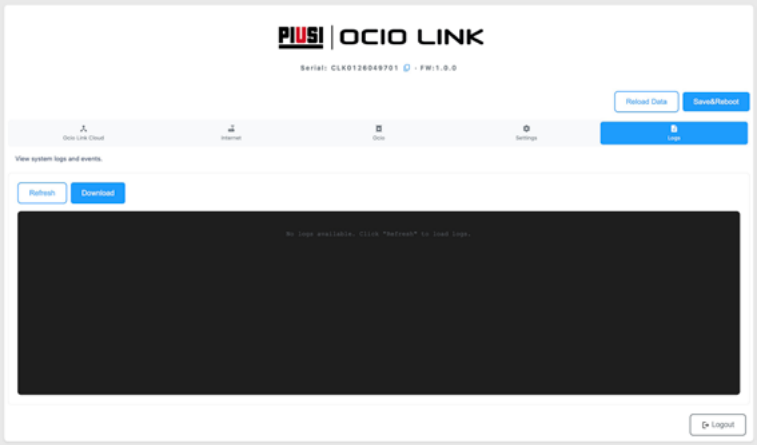

2. The log area appears with the initial message: “No logs available. Click ‘Refresh’ to load logs.”
3. Click the Refresh button to load the most recent logs from the device.
4. The logs are displayed in a text area with a dark background, showing timestamps, severity level (info, warning, error), and detailed messages.

11.11.3 Downloading logs

To save the logs locally (useful for sending them to technical support):

1. Click the Download button next to Refresh.
2. The browser downloads a text file containing the complete logs.

11.12 PUTTING INTO SERVICE

After saving the configuration with Save & Reboot and waiting for the reboot to complete, to put the device into operation, connect it to the network and the cloud following the procedure outlined in the product documentation: turn off Ocio Link, set the switch to Client (CL) mode, turn the device back on, and wait at least 45 seconds before checking the status via the LEDs (see the "LEDs and Connection Status" section). To make further configuration changes, set the switch back to Access Point (AP) and reconnect to the web interface as described in the "First Access" chapter.

Check the system logs (Logs tab) for any related error messages.

11.13 SAVING DOOR CONFIGURATION

After configuring all desired ports, click Save&Reboot in the top-right corner to save the changes and reboot the device. The enabled ports will begin transmitting data to the cloud after the reboot.

EN

12 FW UPDATE

Under standard operating conditions, the device's firmware update can be initiated from the cloud; however, if connectivity is unavailable, you can perform the firmware update locally via:

- Update via microSD card;
- USB connection to a personal computer;

12.1 UPDATE VIA MICROSD CARD

To perform the update via microSD card, follow these steps:

- Download the update file from the Piusi web app;
- Open the zip file, extract "upgrade.binx," and copy it to the root directory of the memory card;
- Disconnect power from the OCIO LINK device;
- Insert the microSD memory card into the appropriate slot;

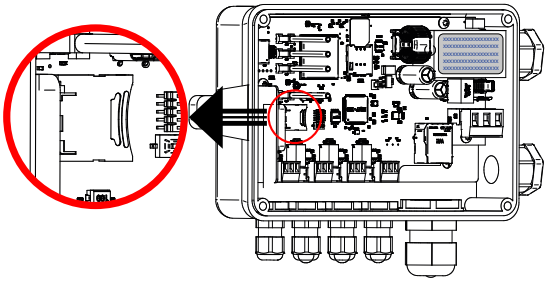

- Reconnect power to the device;

The progress of the firmware upload will be indicated by the Clud LED lighting up first red, then yellow, then green, followed by the three RSSI indicator LEDs lighting up progressively in yellow.

LOADING 10%

LOADING 50%

LOADING 100%

Once the transfer is complete, L'Ocio Link turns off all LEDs and automatically launches the new application. By accessing the CGI configuration menu, you can verify that the update was successful by checking the new FW version. Disconnect power from the Ocio Link device again and remove the microSD card. Restore power to resume normal operation

12.2 UPDATE VIA USB CABLE

To perform the update via USB cable, follow these steps:

- Download the update file from the Piusi web app;
- Open the zip file, extract “upgrade.binx,” and copy it to the root directory of the memory card;
- Disconnect power from the OCIO LINK device;
- Connect the USB Type-C cable to the OCIO LINK device;
- Power on the OCIO LINK device;
- Within 5 seconds of powering on, before the CLOUD LED turns green, plug the other end of the USB cable into the PC.
- Run the OCIO LINK Updater software;
- Identify the COM port associated with the device and select it from the drop-down menu;
- Press the **“Connect”**button;

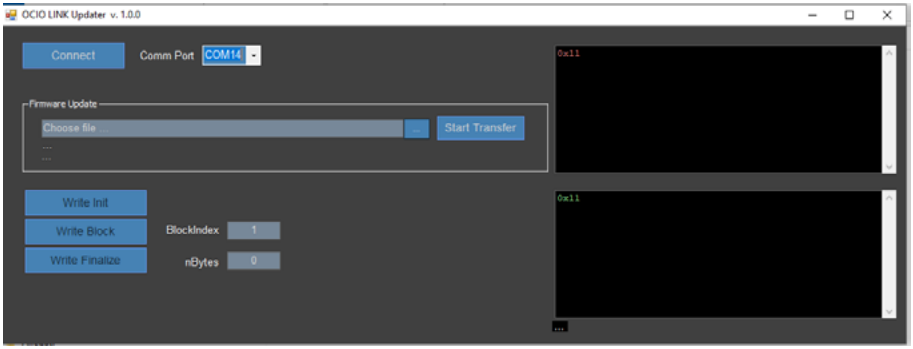

- Click the “...” button and select the file;
- Click the “Start Transfer” button;

LOADING 10%

LOADING 50%

LOADING 100%

Once the transfer is complete, OCIO LINK turns off all LEDs and automatically launches the new application. By accessing the CGI configuration menu, you can verify that the update was successful by checking the new firmware version.
Disconnect the OCIO LINK device from power and remove the microSD card. Reconnect the power to resume normal operation.

13 DEMOLITION AND DISPOSAL

Background	In case of demolition of the system, the parts of which it is composed should be entrusted to companies specialized in industrial waste disposal and recycling, and in particular:
Disposal of packaging	The packaging consists of biodegradable cardboard that can be handed over to companies for normal pulp recovery.
Disposal of metal parts	Metal parts, whether painted or stainless steel, are normally recoverable by companies specializing in metal scrapping.
Disposal of components and electronic electronic	They must mandatorily be disposed of by companies specialized in the disposal of electronic components, in accordance with the guidance of Directive 2012/19/EU (see directive text below).
Environmental Information for Customers residents in the European Union	The European Directive 2012/19/EU requires that equipment marked with this symbol on the product and/or packaging must not be disposed of together with unsorted municipal waste. The symbol indicates that this product should not be disposed of together with normal household waste. It is the owner's responsibility to dispose of both these products and other electrical and electronic equipment through the specific collection facilities designated by the government or local public agencies.
	Disposal of Waste Electronic and Electrical Equipment (WEEE) as household waste is strictly prohibited. This type of waste must be disposed of separately.
	Any hazardous substances in electrical and electronic equipment and/or improper use of such equipment can have possible serious consequences for the environment and human health.
	If such waste is disposed of improperly, the penalties provided for in current regulations may be applied
Disposal of additional parts	Additional constituent parts, such as hoses, rubber seals, plastic parts and wiring harnesses, are to be entrusted to companies specializing in industrial waste disposal.

14 EXPLODED VIEW / DIMENSIONS

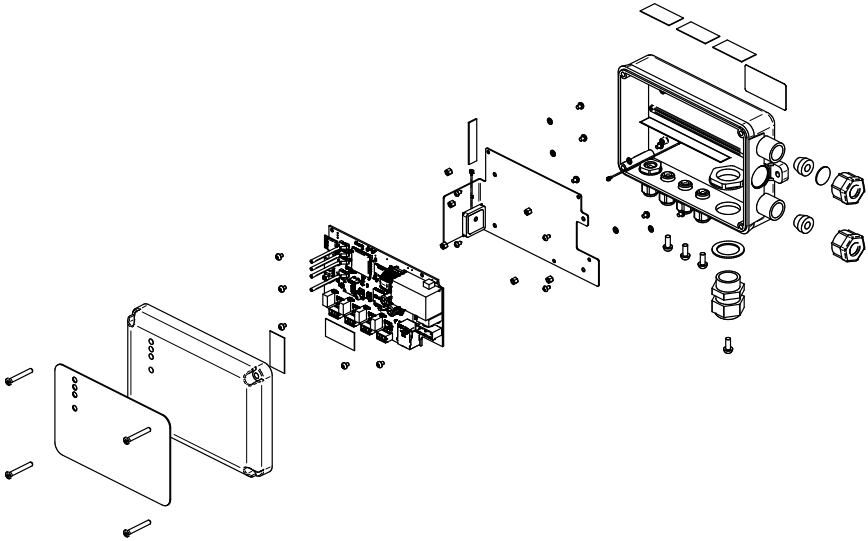

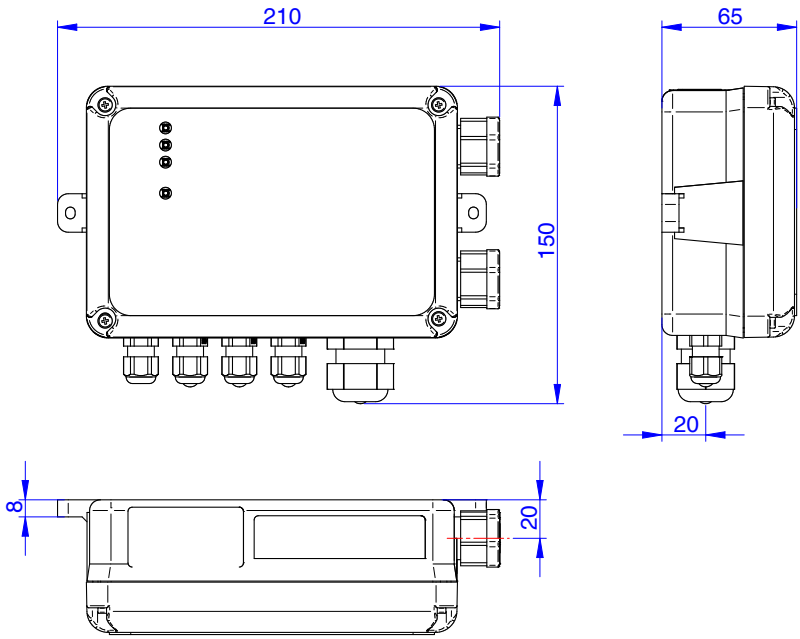

IT Scarica il manuale nella tua lingua!
EN Download the manual in your language!
CS Stáhnout příručku ve vašem jazyce!
DA Download manualen på dit sprog!
DE Laden Sie das Handbuch in Ihrer Sprache herunter!
ES ¡Descarga el manual en tu idioma!
FI Lataa käsikirja omalla kielelläsi!
FR Téléchargez le manuel dans votre langue!
NL Download de handleiding in uw taal!
PL Pobierz instrukcję w swoim języku!
PT Baixe o manual em seu idioma!
RU Загрузите руководство на вашем языке

https://www.piusi.com/support/search-manuals

PIUSI

piusi.com
PIUSI SpA • Suzzara MN Italy

BULLETIN MO848 EN _ 00

06.2026