PIUSI

B.SMART

CUBE MC ADBLUE

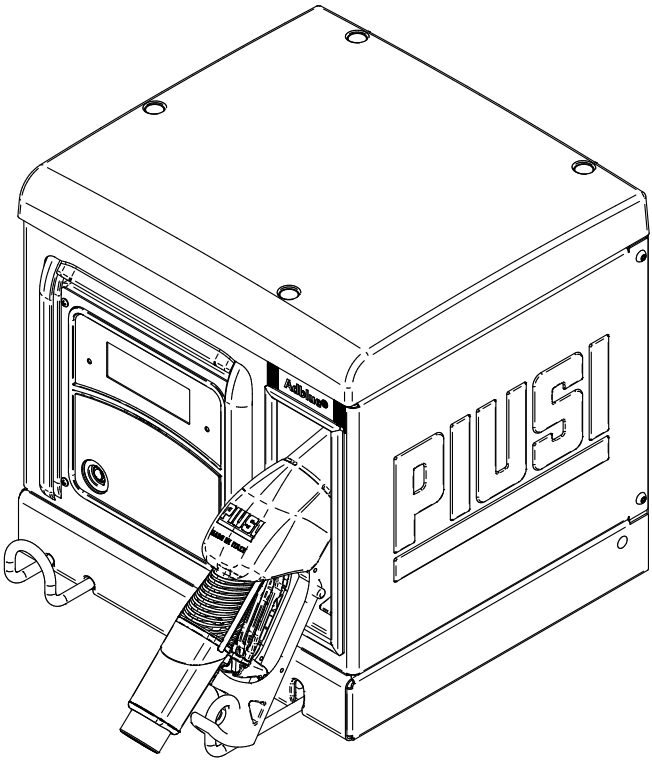

MADE IN ITALY

Installation, Use, and Maintenance Manual

EN

BULLETIN M0895 EN_00

ENGLISH

Bulletin MO895_00

EN

SUMMARY

1 EU DECLARATION OF CONFORMITY....5
1.1 FACSIMILE COPY OF THE EU DECLARATION OF CONFORMITY....5
2 GENERAL WARNINGS....6
2.1 SYMBOLOGY USED IN THE MANUAL....6
2.2 STORAGE OF THE MANUAL....6
2.3 COPYRIGHT NOTICE....6
3 INSTRUCTIONS AND SAFETY GUIDELINES....7
4 FIRST AID INSTRUCTIONS....11
5 TRANSPORT, HANDLING, AND UNPACKING....11
6 DIMENSIONS AND WEIGHTS....12
7 PACKAGE CONTENTS/PRELIMINARY INSPECTION....13
8 MACHINE AND MANUFACTURER IDENTIFICATION....14
8.1 POSITION OF PLATES....14
9 DESCRIPTION OF MAIN PARTS....17
9.1 HOUSING AND PUMP ASSEMBLY....17
9.2 PULSER LITRE COUNTER....17
9.3 SPRAY NOZZLE....17
9.4 LEVEL INDICATOR....17
9.5 DISPLAY COVER....18
9.6 MANAGEMENT SYSTEM....18
10 OPERATION....20
11 TECHNICAL SPECIFICATIONS....22
12 INTENDED USE....25
12.1 INTENDED USE....25
12.2 UNINTENDED USE....25
12.3 REASONABLY FORESEEABLE MISUSE....25
13 INSTALLATION....26
13.1 HAZARDOUS AREA....26
13.2 DISPENSER PLACEMENT....27
13.3 MOUNTING....27
13.4 MECHANICAL INSTALLATION....28
13.5 HYDRAULIC CONNECTIONS....29
13.5.1 SUCTION LINE....29
13.5.2 MAXIMUM LENGTH OF SUCTION PIPING....29
13.5.3 RECOMMENDATIONS AND WARNINGS....29
13.6 ELECTRICAL INSTALLATION....30
13.6.1 POWER CABLE....32
13.6.2 8-POSITION SIGNAL CONNECTOR....32
13.6.3 ELECTRICAL CONNECTION FOR LEVEL CONTACTS....33
13.6.4 RS485 SERIAL DATA CONNECTION....33
13.6.5 CANBUS CONNECTION....34
14 INITIAL CONFIGURATION....35
14.1 CONTROL PANEL POWER-ON....35
15 COMMISSIONING....36
15.1 INITIAL PRIMING....36
16 LITER COUNTER CALIBRATION....37
17 DAILY USE....38
18 DISPENSING VIA USER KEY (I-BUTTON)....39

19 MAINTENANCE 41
19.1 ROUTINE MAINTENANCE 41
19.2 MAINTENANCE OF THE DISPENSING HOSE AND NOZZLE 42
19.3 FLUSHING 43
19.4 LEAVING THE SYSTEM UNUSED FOR EXTENDED PERIODS 43
19.5 EXTRAORDINARY MAINTENANCE 43
19.6 FUSE CHECK AND REPLACEMENT 44
20 TROUBLESHOOTING 45
20.1 MECHANICAL AND HYDRAULIC PROBLEMS 45
20.2 ELECTRICAL/ELECTRONIC CONNECTIONS 46
20.3 ISSUES RELATED TO THE SMARTPHONE APP 47
21 FAQ 48
22 DEMOLITION AND DISPOSAL 50
23 EXPLODED VIEW 51

1 EU DECLARATION OF CONFORMITY.

1.1 FACSIMILE COPY OF THE EU DECLARATION OF CONFORMITY

The undersigned: PIUSI S.p.A
Via Pacinotti 16/A, Industrial Zone . Rangavino
46029 Suzzara - Mantua – Italy

DECLARES, under its own responsibility, that the device described below:

Description:	AdBlue Dispenser
Model:	CUBE ADBLUE B.SMART 230/50
Serial Number:	Refer to the Lot Number indicated on the label affixed to the product
Year of manufacture:	Refer to the year of manufacture indicated on the nameplate affixed to the product.

Complies with the following legislation:

- **Machinery Regulation**
- **Electromagnetic Compatibility**
- **Electrical and electronic equipment**
- **Radio equipment**

The technical file is available to the competent authority upon request to PIUSI S.p.A. or by sending an email to: doc_tec@piusi.com.

THE ORIGINAL DECLARATION OF CONFORMITY IS SUPPLIED SEPARATELY WITH THE PRODUCT

2 GENERAL WARNINGS

To safeguard the safety of operators, to avoid possible damage, and before carrying out any operation, it is essential to have familiarized yourself with the entire instruction manual.

2.1 SYMBOLOGY USED IN THE MANUAL

The following symbols will be used in the manual to highlight particularly important indications and warnings:

	DANGER: ELECTRICAL HAZARD This symbol indicates the risk of electric shock from equipment powered by voltages that are hazardous to humans.
	CAUTION This symbol indicates accident prevention regulations for operators and/or any exposed persons.
	WARNING This symbol indicates that there is a possibility of damage to equipment and/or its components.
	NOTE This symbol indicates useful information.
	Read the instruction manual carefully.

2.2 STORAGE OF THE MANUAL

This manual must be intact and readable in its entirety, the end user and the specialized technicians authorized for installation and maintenance must be able to consult it at all times.

2.3 COPYRIGHT NOTICE

THIS MANUAL IS THE PROPERTY OF PIUSI S.p.A.
All rights to reproduce this manual are reserved by PIUSI S.p.A.
The text may not be used in other publications without the written authorization of PIUSI S.p.A.
© PIUSI S.p.A. - ANY REPRODUCTION, EVEN PARTIAL, IS PROHIBITED.
This manual is the property of PIUSI S.p.A., which is the exclusive owner of all rights under applicable laws, including but not limited to copyright regulations. All rights arising from these provisions are reserved by PIUSI S.p.A.
Reproduction—even partial—of this manual, as well as its publication, modification, transcription, public communication, distribution, commercialization in any form, translation and/or adaptation, lending, and any other activity reserved by law to PIUSI S.p.A.

3 INSTRUCTIONS AND SAFETY GUIDELINES

	ELECTRIC SHOCK: RISK OF ELECTRIC SHOCK OR DEATH Risk of electric shock or death from devices powered by voltages exceeding 50 VAC. **BEFORE PERFORMING ANY INSPECTION OR MAINTENANCE WORK, DISCONNECT THE POWER SUPPLY** Installation operations are performed with the enclosure open and electrical contacts accessible. All these operations must be performed with the device isolated from the electrical grid to avoid the risk of electric shock. **As a general electrical safety rule, it is always recommended to power the device by protecting the circuit with:** - a circuit breaker or disconnect switch with a current rating appropriate for the power line and the devices being powered; - a 30 mA residual current device (RCD) ("GFCI" circuit breaker). - Connect only to grounded outlets using cables with cross-sections and specifications appropriate for the type of installation and in accordance with current regulations. Outdoors, use only extension cords suitable for the specific application, in accordance with current regulations. Unsuitable extension cords can be dangerous. The connection between plug and socket must remain away from water. Before each use, check that the connection cable and plug are not damaged. If damaged, have the cable and plug replaced by qualified personnel. Never touch the plug or socket with wet hands.
	FIRE HAZARD When flammable liquids are present in the work area, flammable vapors may be present which, during use, can cause a fire or explosion.
	EXPLOSION RISKS To prevent fire and explosion hazards, use the dispenser only in well-ventilated areas. Keep the work area free of debris, including manufacturing scraps and containers of solvents or gasoline. Do not plug in or unplug the power cord or operate the switch in the presence of flammable vapors. Keep a working fire extinguisher in the work area.
	FIRE AND EXPLOSION RISK **This product IS NOT SUITABLE for use in a Classified Area or in the presence of a potentially explosive atmosphere.** The use of a cell phone by the user while refueling the vehicle—even with non-flammable liquids—is strongly discouraged in all cases, as it may cause distractions that could be dangerous. PIUSI expressly disclaims any and all liability for any injury to persons or damage to the user's property or that of third parties resulting from failure to comply with the above warnings and/or from any other negligent, reckless, or incompetent conduct on the part of the user.

	This device must be grounded via the designated metal and electrical components. Improper installation or use of the unit may pose a risk of electric shock. All devices in the work area must be electrically "grounded." . Stop all action immediately if sparks or shock are present. Do not use the dispenser until the problem has been identified and resolved. As a general rule of electrical safety, it is always recommended to power the device by protecting the line with : - A circuit breaker with a current rating suitable for the power line and the devices it powers - a 30 mA residual current device (RCD) (ground-fault circuit interrupter (GFCI)). Connect only to grounded outlets using cables with cross-sections and specifications appropriate for the type of installation and in accordance with current regulations. Outdoors, use only extension cords suitable for the specific application, in accordance with current regulations. Unsuitable extension cords can be dangerous. The connection between plug and socket must remain away from water. Before each use, check that the connection cable and plug are not damaged. If damaged, have the cable and plug replaced by qualified personnel. Never touch the plug or socket with wet hands. Do not turn on the fluid distribution unit if any electrical components (such as cables) or hydraulic components (such as the suction/discharge hose or the dispensing nozzle) are damaged. Contact maintenance technicians immediately and replace any damaged parts before use.
	Under no circumstances should the power supply come into contact with the fluid being pumped. Install the unit in a sheltered location. Do not expose to rain. Do not turn on the fluid distribution unit if any electrical components (such as cables) or hydraulic components (such as the suction/discharge hose or the dispensing nozzle) are damaged. Contact maintenance technicians immediately and replace any damaged parts before use.
	BURN HAZARD To avoid serious burns, do not touch liquids or equipment.
	NO SMOKING Do not smoke near the dispenser and do not use the pump near open flames.

PRECAUTIONS FOR USE	
	ESSENTIAL CHARACTERISTICS OF PROTECTIVE EQUIPMENT Wear protective equipment that is: - suitable for the operations to be performed; - resistant to the cleaning products used.
PERSONAL PROTECTIVE EQUIPMENT TO BE WORN	
	Safety shoes
	Close-fitting clothing
	Protective gloves
	Safety glasses

OTHER SAFETY DEVICES	
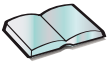	**INSTRUCTION MANUAL** - Do not operate the unit when tired or under the influence of drugs or alcohol. - Do not leave the work area while the appliance is on or in operation. - Turn off the appliance when not in use. - Do not alter or modify the equipment. Alterations or modifications to the equipment may void approvals and pose safety hazards. - Arrange hose and power cords away from passing areas, sharp edges, moving parts and hot surfaces. - Do not kink the hose or use a stronger hose. - Keep children and animals away from the work area. - Comply with all applicable safety regulations. - Do not exceed maximum working pressure or component temperature with lower system rating. - See technical data in all machine manuals. - Use liquids and solvents compatible with the wet parts of the equipment. See technical data in all machine manuals. Read the manufacturer's warnings for liquids and solvents. For more information on the material, request the Material Safety Data Sheet (MSDS) from the "AGILIS" distributor or your dealer. - Check the machine daily. Immediately repair or replace worn or damaged parts with original manufacturer's replacement parts only. - Ensure that the equipment is classified and approved in accordance with the regulations for the environment in which it is used. - Use the appliance only for its intended use. Contact your dealer for more information. - Keep hoses and cables away from transit areas, edges, moving parts and hot surfaces. - Do not kink or excessively bend the hoses, or use the hoses to pull the appliance.
	DANGER OF TOXIC FUMES AND FLUIDS For problems arising from the product coming into contact with the eyes, skin, inhalation, or ingestion, refer to the safety data sheet for the fluid used. Store treated fluids in suitable containers that comply with applicable regulations. Prolonged contact with treated product may cause skin irritation; always use protective gloves when dispensing.
	IMPROPER USE OF THE APPLIANCE Do not use the appliance for purposes other than those for which it was designed and manufactured. Any other use may be hazardous to property, animals, or people.

4 FIRST AID INSTRUCTIONS

PERSONS AFFECTED BY ELECTRIC SHOCKS

Disconnect power, or use a dry insulator for protection in moving the injured person away from any conductor. Avoid touching the injured person with bare hands until the injured person is away from any conductor. Seek the help of trained and qualified persons immediately. Do not work on the switches with wet hands.

5 TRANSPORT, HANDLING, AND UNPACKING

CUBE MC is shipped in non-stackable cardboard packaging. When storing the unit, follow the orientation indicated on the packaging, which features graphic symbols indicating the correct handling orientation.
If the machine is to be lifted, it is important to verify that the load capacity of the lifting equipment and accessories (e.g., slings) is adequate. The use of mechanical handling and lifting equipment must be entrusted solely to authorized and properly trained personnel.
When not in use, the machine—whether packaged or unpackaged—must be stored in a location protected from the elements (rain, humidity, sunlight, etc.) and from dust.
To remove the cardboard packaging, use scissors or a utility knife, taking care not to damage the equipment.
With two people, fully open the packaging and lift the CUBE MC AGILIS, holding it in an upright position, to facilitate its final placement.
Once removed from the packaging, the unit must always be kept in an upright position.
Packaging materials (cardboard, wood, cellophane, polystyrene, etc.) must be placed in the appropriate containers and not left lying around or within reach of children, as they are potential hazards.
Disposal must comply with the regulations in effect in the country of use.

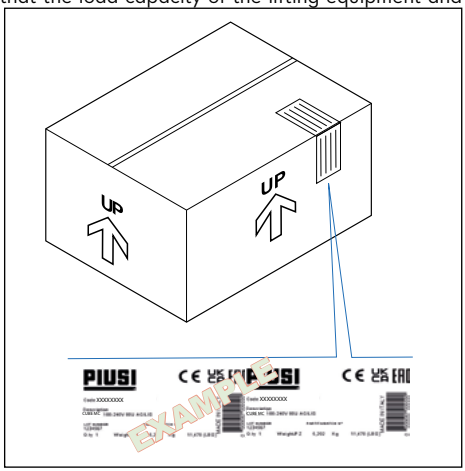

The following markings are affixed to the packaging:

- an arrow indicating the “UP” side;
- a label containing the appliance’s specifications (model, weight, etc.).

6 DIMENSIONS AND WEIGHTS

MODEL	TOTAL WEIGHT (kg)	PACKING DIMENSIONS (mm)
ADBLUE B.SMART CUBE	25	400 x 400 x 460
PEDESTAL KIT	15	

DIMENSIONS WITH ELBOW

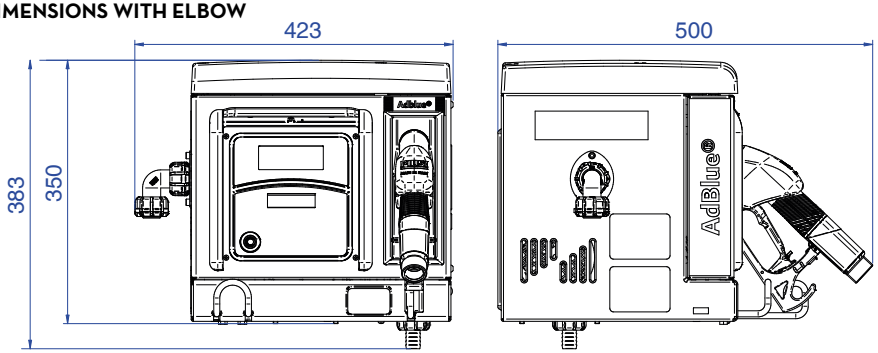

DIMENSIONS WITH FILTER (OPTIONAL)

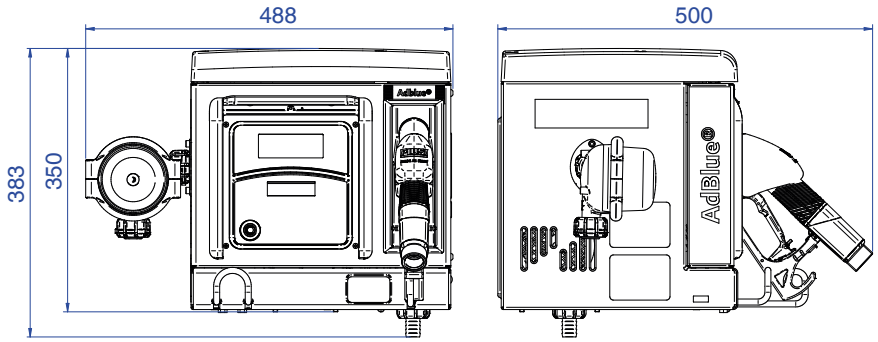

7 PACKAGE CONTENTS/PRELIMINARY INSPECTION

BACKGROUND

Before proceeding with assembly, ensure the machine is in good condition by verifying that the shipped parts do not have any visible damage that could compromise safety or functionality.
If in doubt, do not put the machine into operation; contact the manufacturer's technical support service.
Check that all accessories are included.
Once the inspection is complete, proceed with the assembly of the CUBE MC

2. DO NOT APPLY THREAD SEALANT TO THE ADBLUE VERSION

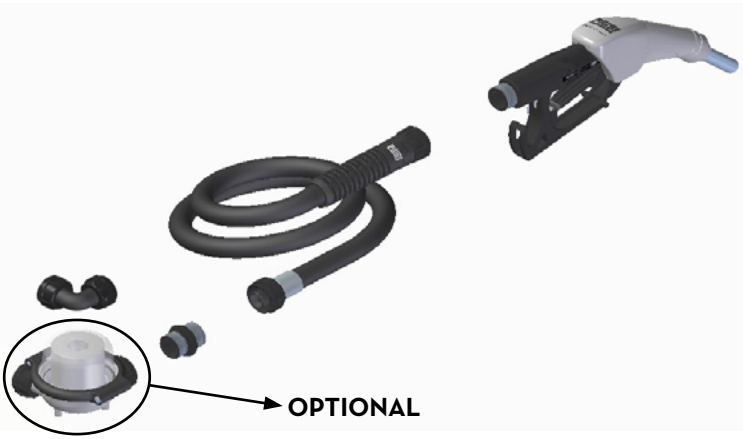

8 MACHINE AND MANUFACTURER IDENTIFICATION

The CUBE MC B.SMART AdBlue dispensing system is equipped with an identification plate affixed to the frame that indicates:
- Model.
- Serial number / Year of manufacture.
- Technical data.
- Markings.

CAUTION: Always verify before installation that the distribution system model is correct and compatible with the actual power supply available (Voltage / Frequency).

8.1 POSITION OF PLATES

Several decals and/or nameplates are affixed to the distribution system to provide the operator with the most important information. Check that these do not deteriorate or come off over time.

NOTE: If this situation occurs, please contact our customer service department to have replacement copies of any damaged or missing nameplates sent to you, so you can reapply them to their original locations.

The decals present are as follows:

	1 - Pump drive nameplate
	2 - CE label with technical data
	3 - Product warranty label

	4 - Warning label with QR code for easy access to the instruction manual
	5 - Plate with warning notes and recommended PPE
	6 - Front decorative plate
	7 - Decorative side plate
	9 - Product identification label for packaging
	10 - Corner label applied to the box

	11 - Upper front display label
	12 - Lower front label with I-Button

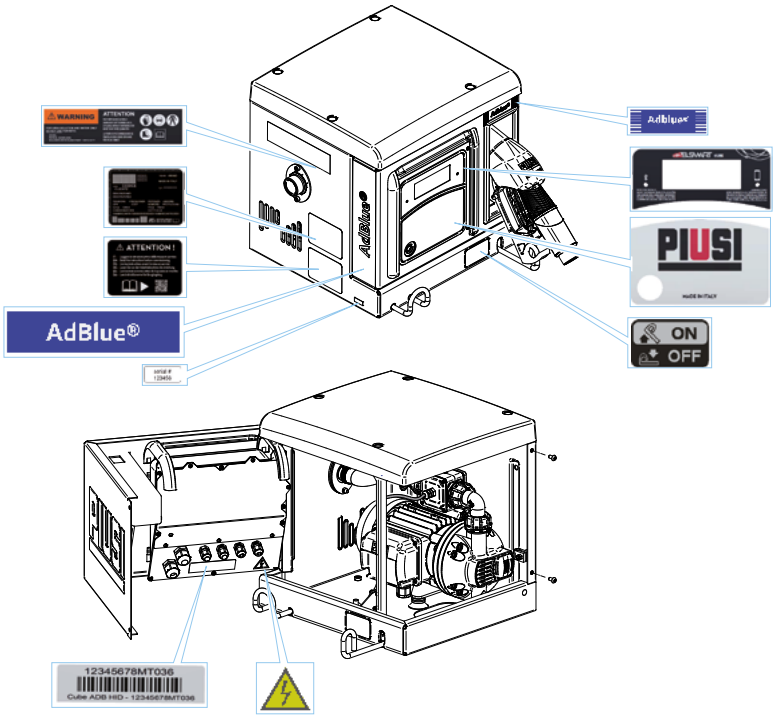

9 DESCRIPTION OF MAIN PARTS

9.1 HOUSING AND PUMP ASSEMBLY

PREMISE
CUBE MC dispensers are designed for dispensing fuel for private use. Characterized by maximum safety and ease of use, CUBE dispensers are reliable, high-performance devices; they install quickly and are ready for use. Equipment and features include:

1. Pump.
2. Motor with IP55 protection rating and thermal protection, 230 VAC single-phase.
3. Rubber hose.
4. Automatic dispensing nozzle with an ON/OFF switch integrated into the nozzle holder.
5. Steel housing with anti-corrosion treatment and a finished paint coating.
6. Control system.
7. Flow meter.

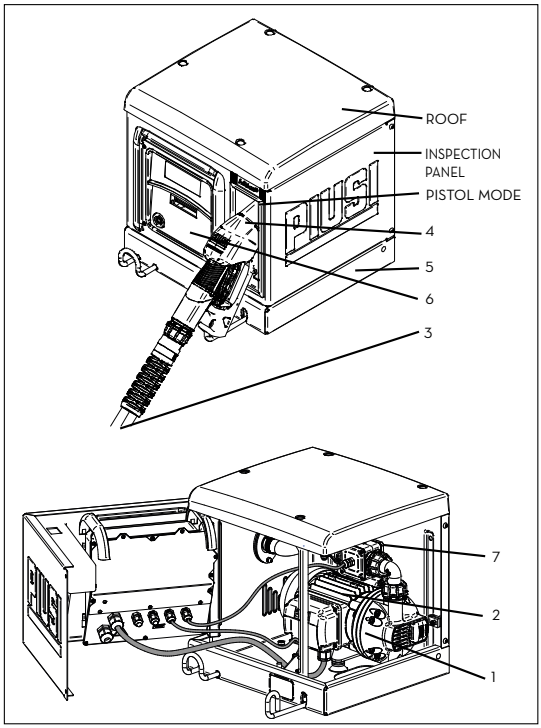

9.2 PULSER LITRE COUNTER

The Pulser flow meter is a precision measurement system designed to ensure accurate fluid measurement. It features a sturdy die-cast aluminum housing, complete with an inlet filter, and is easy to maintain and highly reliable. For more information, refer to the user manual.

9.3 SPRAY NOZZLE

The dispensing nozzle supplied with the CUBE MC is an automatic type, featuring a full-tank shut-off device.

9.4 LEVEL INDICATOR

The level sensors to which the dispenser can be connected must be dry contacts only.

9.5 DISPLAY COVER

To ensure adequate protection for the panel, a shutter-type display cover has been designed that can be lowered if necessary.
In very bright sunlight, it is recommended to keep the display cover lowered at all times.

9.6 MANAGEMENT SYSTEM

B.SMART is an electronic system for controlling fluid dispensing via smartphone.
The control system consists of:
An electronic control unit
equipped with a Bluetooth interface (BLE 4.0 and later), a display, and status LEDs that controls a dispensing pump
An app
installed on a smartphone running the Android operating system or an Apple device running iOS
A web app
—that is, a web portal accessible from any PC or tablet connected to the internet, from which the entire system can be monitored

FUNCTIONALITY. SYSTEM	• System configuration, fueling data collection and management, fueling station management, driver and vehicle management, and detailed fueling reports via the Web app accessible from any PC or tablet using your login credentials • Fuel dispensing using the dedicated app: PIUSI APP, available for download exclusively on smartphones from the Play Store and App Store, which connects to the fuel dispenser/control unit via a BLE connection • Fuel dispensing using the dedicated app, even in areas without 3G/4G or Wi-Fi coverage • Dispensing via an iButton associated with an individual driver • Ability to remotely manage systems located far from the company headquarters

As shown in the diagram at the end of this paragraph, an example of the system's basic structure is provided, illustrating the ability to manage multiple control units simultaneously within the same system.

For more specific details on the connection and communication methods between the control units, please refer to the manual included in the system management WebApp.

OPERATING SYSTEM COMPATIBILITY	**REQUIREMENTS** To use the app, you must have a compatible mobile device from the following list: • Android smartphone or tablet • Apple iPhone or iPad The device must have: • Internet connection (via mobile data or Wi-Fi) • Bluetooth connectivity
	COMPATIBILITY. Check your device's compatibility by viewing the app's listing on the App Store (iOS) or the Google Play Store (Android).

DISTRIBUTOR	Consists of an electronic control unit for monitoring and managing dispensing, equipped with: • Numeric display • iButton reader • BLE 4.0 (or later) connection • Status sensors for: level alarms, flow meter, and fuel nozzle position • Pump on/off control
CLOUD	This is where the database is located for storing system and dispenser configurations, driver information, vehicle license plates, and all fuel dispensing records
WebApp	Web interface used by the system manager. It performs various functions: monitors fuel dispensing (who performed it, when, and at which pump), creates/deletes users from the system, and adds/removes pumps from the system. The only external device that connects to the WebApp is a USB iButton reader
APP	It performs various operations: • Manages two types of users: drivers and managers • It sends commands to the dispenser and receives responses; these commands are used to perform the following: fuel dispensing, calibration, updating the dispenser's firmware, downloading dispenser configuration updates, managing drivers, or uploading the dispenser's fuel dispensing records to the cloud

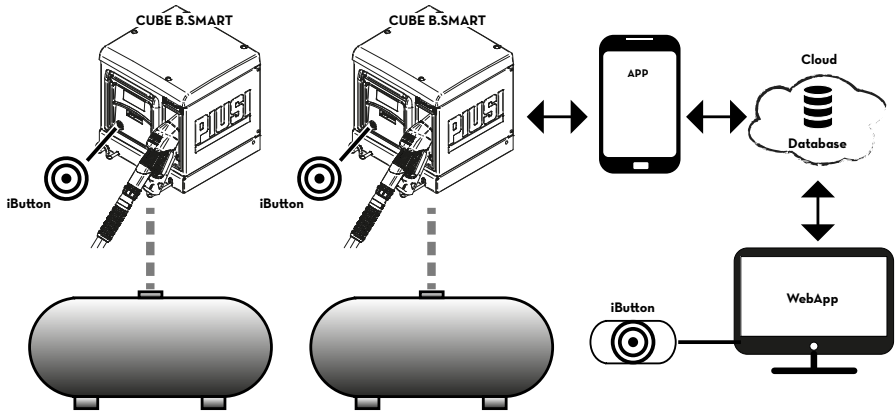

10 OPERATION

The dispenser is powered by an AC voltage ranging from 105 V to 115 V for 110 V 60 Hz models and from 220 V to 240 V for 230 V 50 Hz models. It features a motor, a 4-character backlit display, an iButton reader, a blue LED for Bluetooth connection, and a red LED for warnings/alarms:

If the display's backlight is on, it means that the driver or manager has been authenticated via smartphone, or the driver has been authenticated via iButton.
The display shows: the installed firmware version, the dispensing value, the time, the warning or alarm code when the red LED is on, the boot status for the firmware update, and the percentage of firmware transferred

Blue LED: When lit, it indicates that a device is connected via Bluetooth

Red LED:
When lit steadily, it indicates a series of alarms (codes A1, A2, A3, A4, A6—see table).
When it is flashing, it indicates a warning (see table).

iButton Reader

NOTE Red LED On – The LED may light up for various reasons; each time it lights up, the display shows a code consisting of the letter A followed by an incremental number. Whenever the LED is on, dispensing is not possible.

Below are the possible error codes, along with their respective solutions:

Code	Description	Details / Solution
C 1	**WARNING_MASTER_PUMP_ GROUPA_LEVEL1_CONTACT**	Contact 1 associated with Pump A of the main control unit is active; the red LED is flashing.
C2	**WARNING_MASTER_PUMP_ GROUPA_LEVEL2_CONTACT**	Contact 2 associated with Pump A of the main control unit is active; the red LED is flashing.
C3	**WARNING_MASTER_PUMP_ GROUPA_THR1**	The tank associated with Pump A of the main control unit has reached Level 1 threshold; the red LED is flashing.
C4	**WARNING_MASTER_PUMP_ GROUPA_THR2**	The tank associated with Pump A of the main control unit has reached Level 2; the red LED is flashing.
C9	**WARNING_SLAVE_PUMP_ GROUPA_LEVEL1_CONTACT**	Contact 1 associated with Pump A of the secondary control unit is active; the red LED is flashing.
C 10	**WARNING_SLAVE_PUMP_ GROUPA_LEVEL2_CONTACT**	Contact 2 associated with Pump A of the secondary control unit is active; the red LED is flashing.
C 11	**WARNING_SLAVE_PUMP_ GROUPA_THR1**	The tank associated with Pump A of the main control unit has reached Level 1 threshold; the red LED is flashing.
C 12	**WARNING_SLAVE_PUMP_ GROUPA_THR2**	The tank associated with pump A of the secondary control unit has reached level threshold 2; the red LED is flashing.
C 17	**WARNING_MASTER_PUMP_ GROUPA_PROBE_OCIO**	A fault has been detected on the level sensor connection line. (The system allows manual dispensing)
C 19	**WARNING_MASTER_SLAVE_ GROUPA_PROBE_OCIO**	A fault has been detected on the level sensor connection line. (The system allows manual dispensing)
C25	**WARNING_CANBUS_COM**	A fault has been detected on the connection line between the control units. The system behaves as it does with probe alarms, allowing manual dispensing
A 1	**ALARM_MASTER_PUMP_ GROUPA_LEVEL1_CONTACT**	Contact 1 associated with Pump A of the main control unit is active; the red LED is lit steadily. Dispensing is not possible
A2	**ALARM_MASTER_PUMP_ GROUPA_LEVEL2_CONTACT**	Contact 2 associated with pump A of the main control unit is active; the red LED is on and steady. Dispensing is not possible
A3	**ALARM_MASTER_PUMP_ GROUPA_THR1**	The tank associated with Pump A of the main control unit has reached Level 1 threshold; the red LED is lit steadily. Dispensing is not possible
A4	**ALARM_MASTER_PUMP_ GROUPA_THR2**	The tank associated with Pump A of the main control unit has reached level threshold 2; the red LED is lit steadily. Dispensing is not possible
A9	**ALARM_SLAVE_PUMP_ GROUPA_LEVEL1_CONTACT**	Contact 1 associated with Pump A of the secondary control unit is active; the red LED is lit and steady. Dispensing is not possible
A 10	**ALARM_SLAVE_PUMP_ GROUPA_LEVEL2_CONTACT**	Contact 2 associated with pump A of the secondary control unit is active; the red LED is lit steadily. Dispensing is not possible
A 11	**ALARM_SLAVE_PUMP_ GROUPA_LEVEL1_THR1**	The tank associated with Pump A of the main control unit has reached Level 1 threshold; the red LED is lit steadily. Dispensing is not possible
A 12	**ALARM_SLAVE_PUMP_ GROUPA_LEVEL1_THR2**	The tank associated with pump A of the secondary control unit has reached level threshold 2; the red LED is lit with a steady glow. Dispensing is not possible
A28	**ALARM_BUFFER_FULL**	The dispensing buffer is full. All dispensing data stored in the control unit must be uploaded to the cloud
A29	**ALARM_INACTIVE_PUMP**	No active pumps are detected (Check the system configuration via the WebApp)

A30	**ALARM_RTC_RESET**	The time has been lost. You must download the current time to the control unit via your smartphone
A31	**ALARM_RTC_FAULT**	Unable to synchronize the time (contact support)
A32	**ALARM_SOFT_MEMORY_DATA_FAULT (Cumulative)**	Corrupted memory (you can restore data from a backup in the WebApp)
A33	**ALARM_HARD_MEMORY_DATA_FAULT (Cumulative)**	Corrupted memory (you can restore data from a backup in the WebApp)
A34	**ALARM_VERY_HARD_MEMORY_DATA_FAULT (Cumulative)**	Damaged memory (contact support)

Regarding warning/alarm logic, it is important to note that one or more control units may be connected to the same tank or share common level contacts, as illustrated in the system description section.
In these situations, warnings and alarms originating from one control unit will be propagated to the other control units that share the resource.
For more specific details on the connection and communication methods between the control units, please refer to the manual included in the system management WebApp.

11 TECHNICAL SPECIFICATIONS

INTENDED USE

Implementation of a fluid dispensing and control system for private use not subject to special regulations such as ATEX for potentially explosive environments.

CAUTION

DO NOT INSTALL THE B.SMART SELF-SERVICE SYSTEM IN ENVIRONMENTS CLASSIFIED AS POTENTIALLY EXPLOSIVE ACCORDING TO ATEX REGULATIONS.

MAXIMUM VARIATIONS IN ELECTRICAL PARAMETERS

The electric motors installed in the dispensers accept maximum variations:
supply voltage of +/- 5%
and maximum frequency variations of +/- 2%
SEE THE TECHNICAL DATA TABLE BELOW

CAUTION

ALWAYS VERIFY BEFORE INSTALLATION THAT YOUR MODEL IS CORRECT AND SUITABLE FOR THE ACTUAL AVAILABLE POWER SUPPLY (VOLTAGE / FREQUENCY).

–

Signal	Certified Standard	Limits	Notes
Input Power supply	220 VAC – 240 VAC for 230 VAC and 50 Hz models	400 W - 1.95 A	The circuit board features an onboard switching power supply that supports a wide range of supply voltages and frequencies, making the device highly resistant to the significant voltage or frequency fluctuations common in electrical power distribution networks in many parts of the world
Key Interface Electronic	YELLOW Key (iButton): Enablement input via PIUSI electronic key	Drivers' Yellow keys are registered on the PC via a software procedure, and these drivers are then authorized to use one or more fueling stations	It is possible to configure whether or not this key is required
Input contact Level 1 (only for versions where available)	Dry contact or Open Collector (NPN) electronic signal. If a level sensor needs to be powered, 24 Vdc is also available at the terminal. The maximum current available to the sensor for its power supply is 25 mA	Approximately 1 mA at 5 Vdc will be supplied to the dry contact (or to the open-collector output)	You can configure whether or not this signal is present; you can also configure the signal type (normally open or normally closed for versions where this feature is available). Finally, you can choose the action the control unit should take when it receives this signal: it can simply trigger a display alarm, or it can completely disable other output functions if the "Pump Lock" feature is enabled
Input contact Level 2 (only for versions where available)	Dry contact or Open Collector (NPN) electronic signal. If a level sensor needs to be powered, 24 Vdc is also available at the terminal. The maximum current available to the sensor for its power supply is 25 mA	Approximately 1 mA at 5 Vdc will be supplied to the dry contact (or open collector)	You can configure whether or not this signal is present; you can also configure the signal type as normally open or normally closed for versions where this feature is supported. Finally, you can choose the action the control unit should take when it receives this signal: it can simply trigger a display alarm, or it can completely disable other output functions if the "Pump Lock" feature is enabled
Auxiliary Power supply 24 Vdc auxiliary output	24 Vdc auxiliary output to power external electronic devices	Imax = 25 mA	The device to be powered must not draw more than 25 mA from the 24 Vdc power supply. Typically, this could be a level sensor
Fuses	F1 (AC power input) 800 mA T (delayed) F2 (motor output) 20 A T (delayed) F3 (AC/DC output) 800 mA T (slow-blow)		
Rating IP Protection Rating	IP 55		

Operating Temperature	From -10°C to +40°C	
Storage Temperature	From -20° C to +60°C	
Humidity	< 90%	
Distances Wiring	Maximum pulser distance	15 m
	Max. level sensor distance	100 meters
Limits Display and Counting	Floating-point sequence: 0.00 -> 99.99 -> 999.9 -> 9999 The maximum dispensable quantity is 9999 units, regardless of the unit of measurement set (liters/gallons/pints) **0.00** → **9.999** → **99.99** → **999.9** → **9999**	
	PRESET: Maximum preset quantity	9999 liters/gallons/ pints
Memory	The Electronic Control Unit can store: - Up to 500 drivers - Up to 500 dispensing transactions	

12 INTENDED USE

12.1 INTENDED USE

CUBE MC B.SMART ADBlue is designed to manage refueling for private use.
Use for managing systems other than those intended is not provided for or permitted

WARNING: **Environmental operating conditions**

Ambient temperature:

- AdBlue version: min. -5°C / max +40°C,

Relative humidity: max 90%.

The temperature limits indicated apply to the pump components and must be observed to prevent possible damage or malfunction.

12.2 UNINTENDED USE

CAUTION: **Flammable liquids and explosive atmospheres**

CUBE MC B.SMART ADBlue is not designed in accordance with ATEX regulations or for use in environments with potentially explosive atmospheres.

Do not install the CUBE MC B.SMART ADBlue in potentially explosive locations.

The system is not designed for the dispensing of gasoline, flammable liquids with a flash point <55°C/131°F, or for operation in environments with a potentially explosive atmosphere.

Its use is therefore prohibited under the above conditions.

WARNING: **Intended Use**

It is strictly prohibited to use the system for purposes other than those intended. Any use other than that for which the system was designed and described in this manual is considered IMPROPER USE; therefore, PIUSI S.p.A. disclaims all liability for any damage caused to property, people, animals, or the system itself.

12.3 REASONABLY FORESEEABLE MISUSE

For the CUBE MC B.SMART AdBlue , the smartphone is an indispensable tool for configuring and recording dispensing operations managed by the system; however, its use is prohibited during dispensing while in the vicinity of the dispenser.

WARNING: Use the smartphone solely and exclusively for pairing, authentication, and connecting the user's device to the dispenser. While refueling the vehicle—even with non-flammable liquids—the use of a phone is strongly discouraged in any case, as it can cause distractions that may be dangerous.

13 INSTALLATION

PREMISE

CUBE MC B.SMART ADBlue can be installed outdoors.
However, it is recommended to place it under a canopy to ensure a longer service life for the SYSTEM and provide greater comfort during USE in case of inclement weather.
Installation must be performed by qualified personnel and carried out according to the instructions provided in this chapter.

WARNING: **Authorized Installation Personnel**

All installation operations must be performed only by competent and authorized personnel, who must:
- Install the system in a dry, well-ventilated location.
- Ensure that the accessories necessary for the proper operation of the unit are installed correctly.
- Use only the accessories supplied with the system.

WARNING: The use of unsuitable accessories not supplied with the system is strictly prohibited. PIUSI S.p.A. assumes no liability for damage to persons, property, or the environment resulting from failure to comply with this requirement.

THE UNIT IS FOR PROFESSIONAL USE ONLY

The unit must be installed in a sufficiently well-lit location, in compliance with applicable regulations.

The unit is designed for use in a dry location. If installed outdoors, provide an adequate protective cover.

ELECTRICAL CONNECTIONS

Electrical connections must be made properly by qualified personnel, in full compliance with the regulations in effect in the country of installation and the instructions provided in the electrical diagrams in this manual.

WARNING: The CUBE MC B.SMART ADBlue Electronic Panel is NOT equipped with circuit breakers; it is therefore essential to install, upstream of the CUBE MC, a power distribution panel equipped with a main circuit breaker and a ground-fault circuit interrupter (GFCI) suitable for the type of CUBE MC to be installed, or at least a rapid disconnection system—such as a plug-and-socket connection—to be used in the event of malfunctions;

The installer must provide a plug-and-socket connection to allow for rapid disconnection of the electrical system in the event of malfunctions.

CAUTION: Before accessing the electrical components, make sure you have turned off all main circuit breakers that supply power to the unit.

13.1 HAZARDOUS AREA

Any fuel dispenser is a hazardous area as defined in the National Electrical Code. Installation must comply with the following standards:
- National Electrical Code (NFPA No. 70).
- Code for Motor Fuel Dispensing Systems and Repair Shops (NFPA No. 30A).

CAUTION: The installer is responsible for familiarizing themselves with and complying with all local codes.

This product is intended for use in a non-hazardous area.

All equipment must be installed outside of hazardous areas.

NOTE: Local codes may impose specific installation requirements. Installation is subject to approval by the local authority having jurisdiction over the site.

13.2 DISPENSER PLACEMENT

The placement of the CUBE MC B.SMART AdBlue must ensure that:
- The removable panels can be easily removed to access internal components when necessary.
- The maximum distances and elevation differences between the dispenser and the tank are observed.
- The unit can be properly and securely anchored to the ground on a horizontal surface.

The placement of the dispenser determines the following parameters, which characterize each installation:
- Hp: Suction head.

For the stations to function properly, the following limitations must be strictly observed:
- Max. Diesel Head: no more than 3 meters
- Max. AdBlue head: no more than 2 meters
-

13.3 MOUNTING

Before beginning installation, check that no packaging materials are trapped inside the pipes.
Prepare appropriate mounting brackets or fastening clamps depending on where you intend to mount the CUBE MC B.SMART ADBlue. The pipe coming from the tank must be aligned with the threaded inlet of the pump filter, located beneath the CUBE MC B.SMART ADBlue.

ABOVE-GROUND TANK

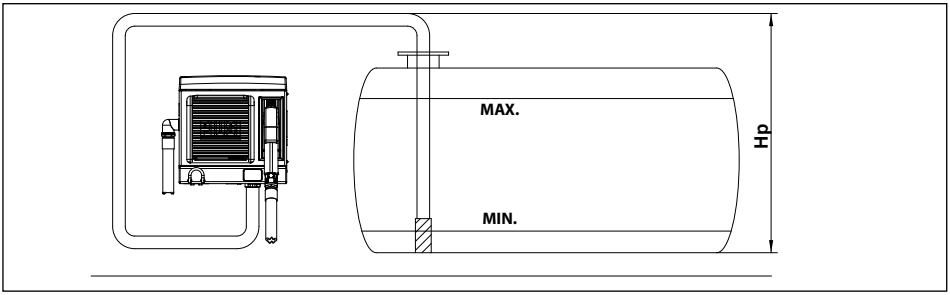

UNDERGROUND TANK

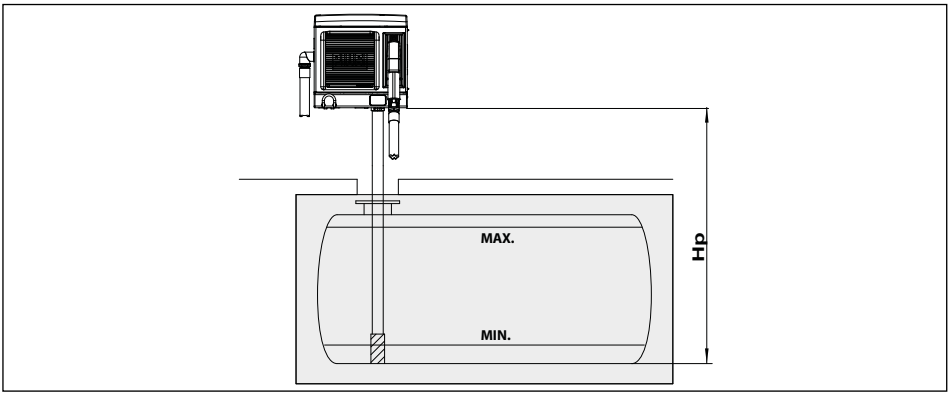

13.4 MECHANICAL INSTALLATION

The CUBE MC B.SMART ADBlue can be mounted on a wall or on a pedestal.
For wall mounting, you will need . 4 M8 screws.
For pedestal mounting, you will need . 4 M6 screws.
Below are diagrams showing the hole center distances for precise installation.
The pedestal is a Piusi accessory not included with the CUBE MC B.SMART ADBlue unit.

WALL MOUNTING

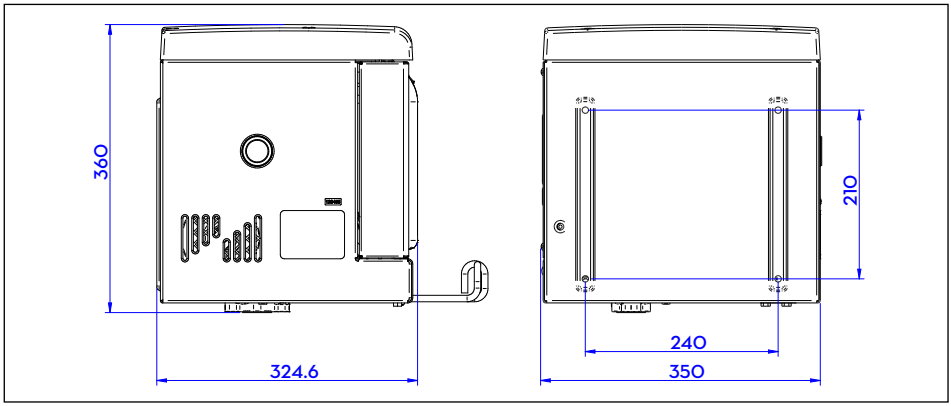

MOUNTING ON A PEDESTAL

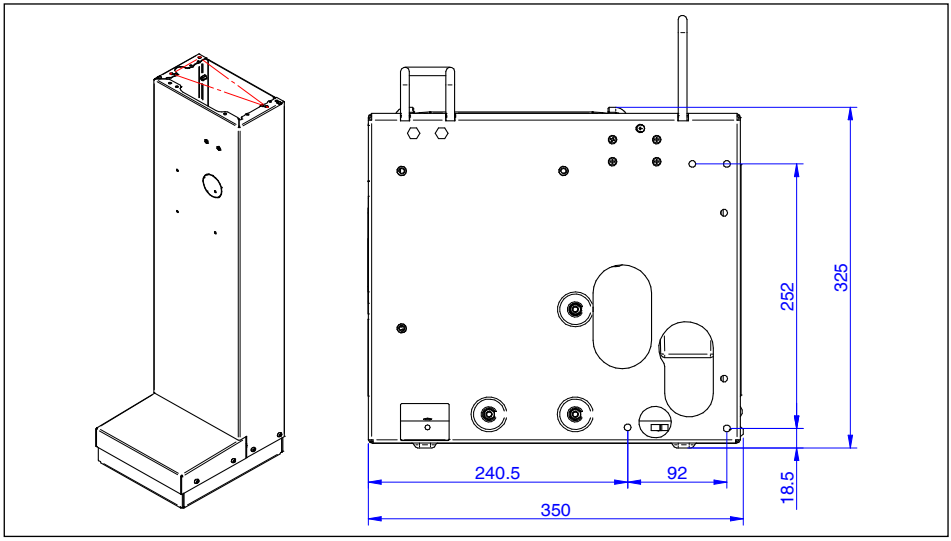

13.5 HYDRAULIC CONNECTIONS

PREMISE

Always follow these WARNINGS:
- Use piping and fittings suitable for use under vacuum.
- Use piping and fittings suitable for use with the treated liquid. Materials unsuitable for this purpose may cause serious damage to the pump; they may also cause pollution.
- Do not use fittings with tapered threads, as they could damage the threaded port of the pump filter if forced beyond their limits.
- Use wide-radius bends to minimize pressure drop.
- Ensure that the suction line is perfectly clean and free of debris.
- Always install a foot valve equipped with a strainer at the end of the suction pipe. The valve must be placed at the bottom of the tank and have the same diameter as the pipe.
- Before beginning installation, check that no packaging materials are trapped inside the piping.

13.5.1 SUCTION LINE

The diameter of the suction line "Ds" must be selected based on the dispenser model and the dispenser's position relative to the tank. With reference to the "Hp" and "Ls" values defined in the "MOTOR POSITIONING" section, the following MINIMUM DIAMETERS for the suction line must be strictly adhered to.

13.5.2 MAXIMUM LENGTH OF SUCTION PIPING

The maximum pipe length, the pipe diameter, and the head "Hp" are parameters that are closely interrelated in determining the suction conditions.
This head must not be such as to create a vacuum greater than 0.6 Bar.
It follows that, after ensuring compliance with the minimum pipe diameter specified in the "Recommendations and Warnings" provided below, the shorter the pipe length, the greater the head (Hp) that the fluid must overcome, and vice versa: in fact, the vacuum increases progressively by 0.08 bar for every meter of increase in the pump's static head relative to the free surface level of the fluid in the tank.

13.5.3 RECOMMENDATIONS AND WARNINGS

NOTE:
- The suction piping must withstand a pressure of at least 10 bar and must have a minimum diameter of NOT LESS THAN 1-1/4".
- The piping must also be suitable for operation under vacuum.
- Use piping and fittings suitable for the fluid being used. Unsuitable materials may cause damage to the pump or injury to persons, as well as pollution.
- Any bends in the suction line must have the largest possible radius to minimize pressure drop.
- Ensure that the suction line is clean and free of debris

13.6 ELECTRICAL INSTALLATION

ELECTRICAL CONNECTIONS

CAUTION: Electrical connections must be made properly by qualified personnel, in full compliance with the regulations in effect in the country of installation and the instructions provided in the electrical diagrams of this manual.

CAUTION: The MC CUBE AGILIS Electronic Control Panel is NOT equipped with circuit breakers; it is therefore essential to install, upstream of the MC CUBE AGILIS, a power distribution panel equipped with a circuit breaker/disconnector rated for the appropriate current capacity of the power line and a ground-fault circuit interrupter (GFCI) suitable for the type of electrical load.

Alternatively, provide a rapid disconnection system, such as a plug-and-socket connection, to be used in the event of malfunctions.

CAUTION: Before accessing the electrical components, make sure you have turned off all main circuit breakers that supply power to the unit.

The following describes the steps required to perform the wiring correctly:

- Open the MC CUBE.
- Open the rear cover of the control unit.
- Close the rear cover of the control unit.
- Close the CUBE MC..

OPENING THE CONTROL UNIT'S REAR COVER

Unscrew all 7 screws on the control unit's rear cover to access the electronic circuit board compartment.

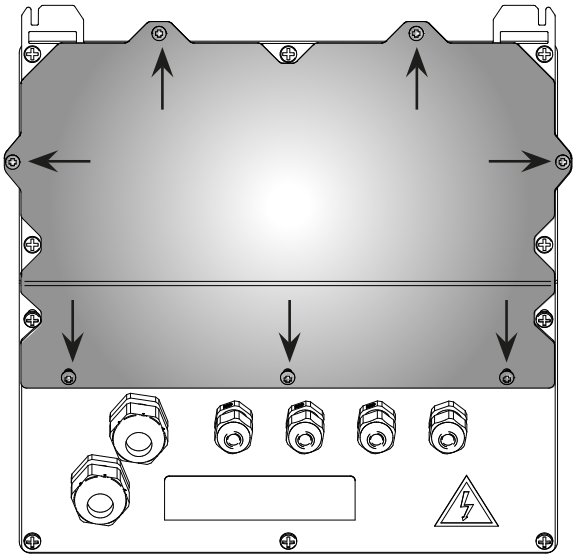

CABLE GRIP CONNECTION

Cable gland connections: The cable glands to be used for the various signals are indicated to ensure optimal cable routing inside the control unit. The pulser input and motor output are already wired.

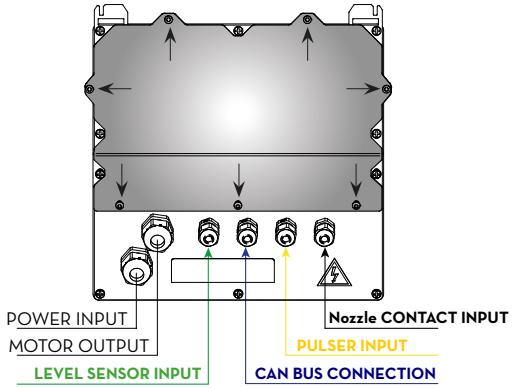

Once the cover is open, you can access the circuit board and its connectors:

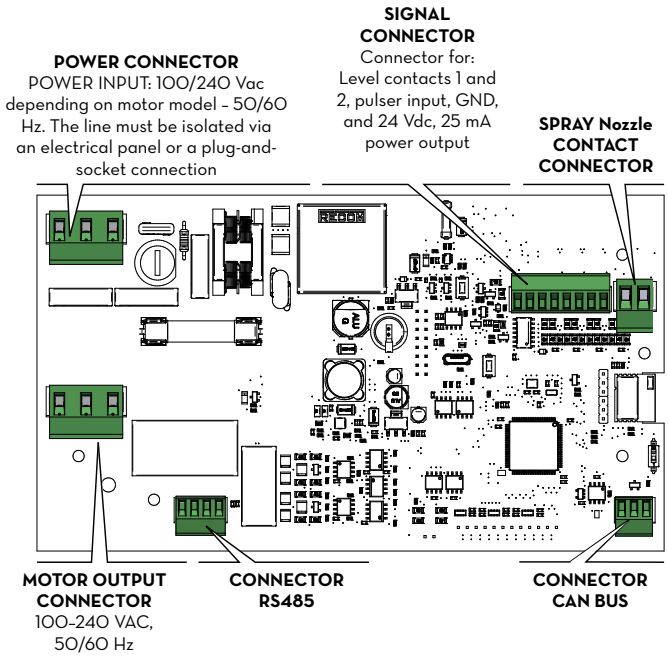

13.6.1 POWER CABLE

Insert the ground wire (yellow-green jacket) into the center hole of the terminal block, then connect the live and neutral wires to the right and left terminals, respectively, and tighten the wire clamping screws.

Voltage specifications:
The electronic control unit must be powered at voltages and frequencies compatible with the motor it will drive:
- If the motor is 230 VAC at 50 Hz, the control unit must be powered at the same voltage and frequency (220 VAC – 240 VAC at 50 Hz).
- If the motor is 120 V – 60 Hz, the control unit must be powered at the same voltage and frequency (110 VAC – 130 VAC at 60 Hz).

CAUTION: The CABLE SIZE must be selected based on the current drawn by the motor, which is the device through which almost all the current flows.

Pay attention to the cable specifications:
- The signal and power cables used in this product must have insulation rated at 300V or higher.
- The power cable must have a cross-sectional area greater than or equal to AWG 16.

NOTE: The maximum current drawn by the motor at 230 V is 1.95 A.

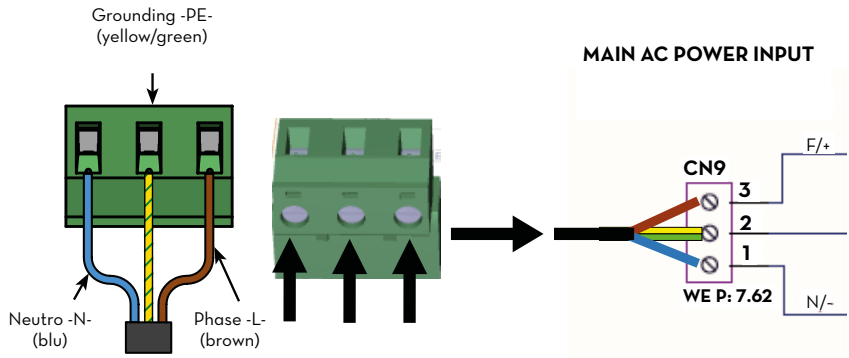

13.6.2 8-POSITION SIGNAL CONNECTOR

24 Vdc output (25 mA max).
LITRE COUNTER Pulser Input.
Level contact. Dry contact input for managing a tank level alarm.

13.6.3 ELECTRICAL CONNECTION FOR LEVEL CONTACTS

"Regarding Level Contact 1 and Level Contact 2, it should be noted that these are configurable contacts that allow you to connect:

- a 4-20 mA level sensor
- 0-10 V level sensor
- dry contact (switch not necessarily connected to the tank's internal levels)

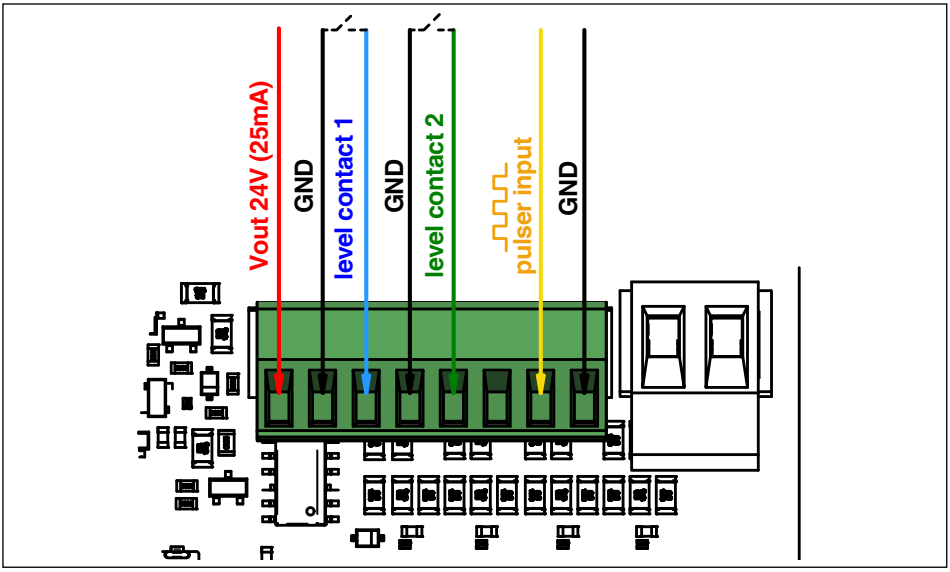

13.6.4 RS485 SERIAL DATA CONNECTION

The B board.Smart board is equipped with two RS-485 serial communication channels.
In addition to the level contacts on the signal terminal block, you can connect to the B.Smart board.

NOTE: When using OCIO 2.0 on the RS485 connector, DO NOT connect level contacts 1 and 2 to the signal connector."

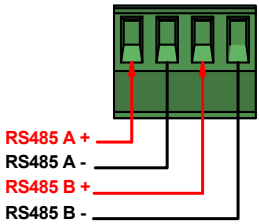

13.6.5 CANBUS CONNECTION

The control units can be interconnected via a CAN bus connection. The figure shows the connector located on each individual board and a simple wiring diagram for connecting n control units.

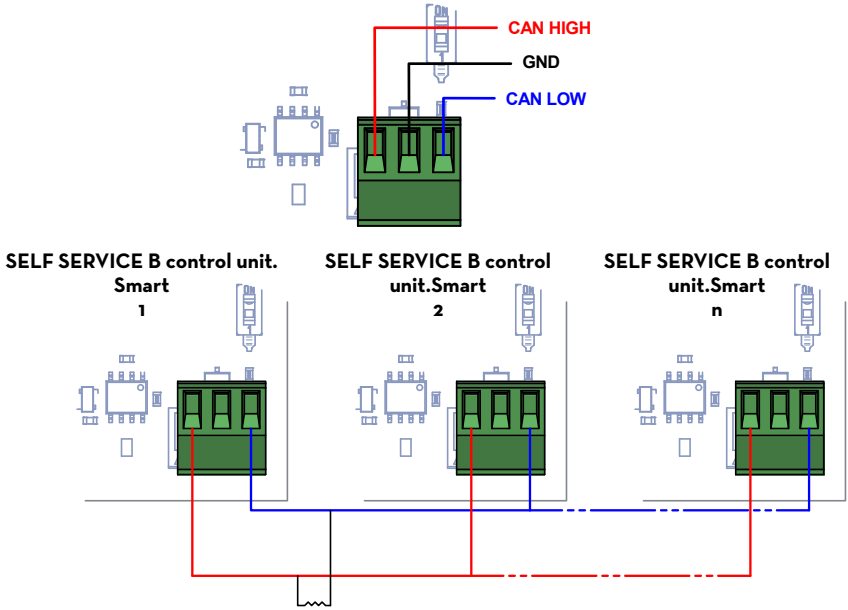

CAUTION: Insert the supplied 120-ohm resistor between CAN HIGH and CAN LOW, along with the corresponding resistors in the terminal blocks, as shown in the figure.
The 120-ohm resistor must be inserted ONLY ONCE within the CAN bus line, as shown in the wiring diagram.

NOTE: For the CAN bus connection, it is recommended that you:

Use a cable with a characteristic impedance of 120 ohms

Do not exceed 100 m in length for the connection between the n SELF SERVICE B.SMART units

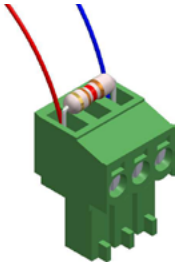

CLOSING THE REAR COVER OF THE CONTROL UNIT AND CLOSING THE COVER

Replace the cover and tighten the 7 mounting screws. Finally, tighten the 2 side screws

14 INITIAL CONFIGURATION

Before use, you must configure the system by connecting the SELF SERVICE B-SMART to the smartphone app and the dedicated web app.

To configure the system, you must:

- Turn on the control unit
- Configure the control unit via the app
- Configure the control unit via the WebApp

APP

PIUSI Download the PIUSI B:SMART app from your preferred app store

WEB APP

B.SMART Use the PIUSI WebApp available at the following link: https://bsmart.piusi.com/

To log in, enter the username, password, and side code you set during registration via the portal.

NOTE: All information and instructions regarding the use of the PIUSI APP and the PIUSI WebApp are available in the respective manuals MO617* and MO618*, available in multiple languages on the website https://www.piusi.com/support/search-manuals

14.1 CONTROL PANEL POWER-ON

Below is the sequence of messages displayed by the system during startup

1	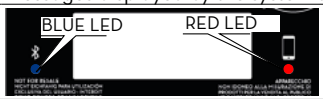	The display, BLUE LED, and RED LED turn on
2		All segments ON
		All segments OFF
3		The first part of the firmware revision number is displayed (in this example, r.1.OO)
4		The last part of the firmware revision number is shown (i = internal): i.OO
5		The display backlight and LEDs turn off, and O.OO appears on the display

15 COMMISSIONING

To properly commission the CUBE MC B.SMART ADBlue, in addition to activating the app and web app, you must perform a few simple steps.
Once the electrical connections have been made, power can be supplied to the CUBE MC B.SMART ADBluevia the main switch that the installer must install on the upstream line.
The system will power on, as indicated by the backlit LCD screen on the front panel lighting up. Even if you remove the nozzle from its housing, the pump will NOT start, as it is disabled by the B.SMART system.

PUMP PRIMING:
CUBE MC B.SMART ADBlue is equipped with a self-priming pump that facilitates the initial startup process. Therefore, it is not necessary for the suction line to be completely filled with fluid during startup. For rapid priming—particularly in installations with a significant height difference between the pump and the tank—it is, however, important that the pump be "wet," meaning that a minimal amount of fluid is present inside the impeller chamber. The pump is delivered properly "primed" and ready for use. However, if the installer believes that the pump is completely dry—for example, due to prolonged storage—they must prime it using the methods they deem most appropriate.

15.1 INITIAL PRIMING

To prime the pump:
- Remove the dispensing nozzle from its housing
- ACTIVATE DISPENSING (VIA THE APP, WEB APP, OR I-BUTTON KEY)
- Lift the control lever
- The pump will start immediately and will continue running indefinitely until the control lever is set to the OFF position
- Operate the lever on the automatic nozzle, keeping the spout inside a suitable container or the suction tank itself. Initially, air will come out of the nozzle, and after a short time, the FLUID will begin to flow.

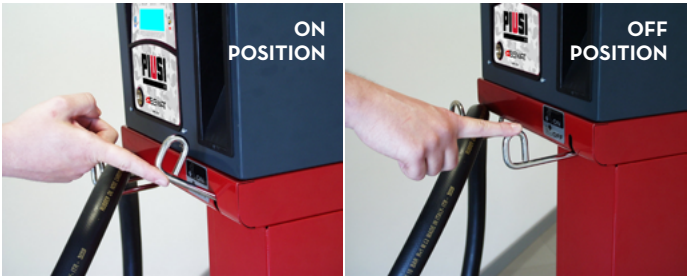

CAUTION: The initial priming of the pump must be performed by qualified personnel who must be present during all stages of the process. If the phase during which only air is dispensed lasts longer than a couple of minutes, STOP THE PUMP and verify that:

- The pump is not running completely dry, but is at least "wet" with fluid.
- The suction line is completely free of air leaks and is fully submerged.
- Ensure that the filters are not clogged.
- Ensure that the suction and/or discharge lines are not blocked.
- The installation (head, pipe diameter, and length) complies with the limits outlined in Chapter 13.
- The vent valve is closed.

Continue pumping until the flow is steady and free of air. Set the control lever to the OFF position: The pump stops. Return the spray nozzle to its holder.

16 LITER COUNTER CALIBRATION

Before using **the CUBE B.SMART**, you should verify the COUNTING ACCURACY.
To this end, proceed as follows:
• Enter a previously enabled USER PIN
• Dispense into a calibrated container
• Compare the amount of fluid dispensed using a calibrated container.

CAUTION: To ensure an accurate verification, it is essential to follow these instructions:

- Use a precision sample container with a graduated scale and a capacity of at least 20 liters.
- Before the test, ensure that all air has been purged from the system by dispensing until a full, steady flow is achieved.
- Dispense continuously at the maximum flow rate of the CUBE B.SMART
- Stop the flow by quickly closing the dispensing nozzle.
- Reach the graduated section of the sample container, avoiding prolonged dispensing at low flow rates and instead performing short bursts at maximum flow rate.
- Compare the reading on the container with the reading provided by the CUBE B.SMART after waiting for any foam to subside.

If the accuracy is NOT satisfactory, perform a CALIBRATION OF THE LITER COUNTER as indicated in the specific manual.

CAUTION: Differences of up to 1/10 of a liter on 20-liter dispensing operations fall within the guaranteed accuracy of +/- 0.5%

CAUTION: For dispensing volumes of 2 liters or less, the manufacturer does not guarantee the same counting accuracy.

17 DAILY USE

All CUBE B.SMART models guarantee access restricted to authorized users only. THE SYSTEM verifies the user's authorization through two alternative methods:
- USER REGISTRATION IN THE B.SMART APP
- Insertion of an electronic key

CAUTION: All AUTHORIZED USERS must be properly trained and be familiar with at least the information provided in this chapter.

The configurability of the B.SMART system allows the system to prompt the user to ENTER additional optional data (vehicle license plate, mileage, quantity to be dispensed). See the DIGITAL APP MANUAL FOR FULL DETAILS. If these options are not set, B.SMART recognizes the authorized USER and immediately enables the pump, allowing fueling to begin.

ATTENTION: Authorization does not result in the pump starting immediately; the pump is controlled by a switch (located in the nozzle housing) operated by the user.

The pump starts (if previously enabled) as soon as the control lever is in the ON position, while it stops as soon as the control lever is in the OFF position. No further manual action is required to start or stop the pump.

18 DISPENSING VIA USER KEY (I-BUTTON)

When the manager creates a driver's profile, they can add an electronic key (iButton) required for access. To do this, simply add the last 7 digits of the hexadecimal code associated with the key to the driver's profile in the WebApp (see the WebApp manual, chapter "ADDING A NEW DRIVER").

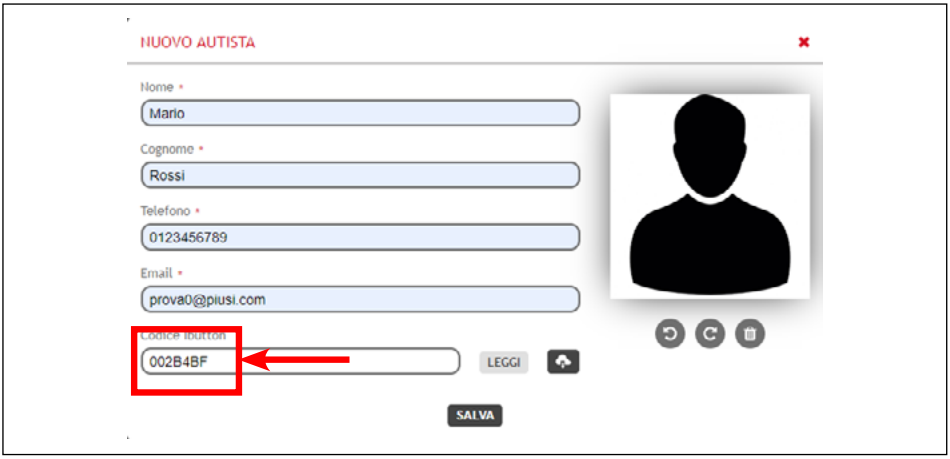

The iButton serves as a means of authentication to replace the smartphone.
To start fueling, simply place the iButton on the reader located on the control unit; authentication takes place, and then fueling can begin. Fueling transactions are uploaded to the cloud as soon as a smartphone with an active data connection connects to the control unit.

ATTENTION: Fuel dispensing using the iButton is permitted only after the procedures described in sections 14.1, 14.2, and 18.1 have been successfully completed using a smartphone and the WebApp. These procedures are essential, as they allow the operator to configure the system and manage the control units within it, and likewise ENABLE THE DRIVER TO DISPENSE FUEL AT A SPECIFIC CONTROL UNIT.

NOTE: Fuel dispensing via iButton is recommended only in cases of extreme necessity when it is not possible to dispense fuel using a smartphone. This is because dispensing with an iButton does not allow for direct updates to the cloud, thereby compromising the system's full potential.

Driver authentication via i-Button

Start of Delivery

End of refueling

19 MAINTENANCE

19.1 ROUTINE MAINTENANCE

CUBE MC B.SMART ADBlue has been designed to minimize maintenance requirements.
However, to ensure maximum efficiency and safety at the station, the following inspection and routine

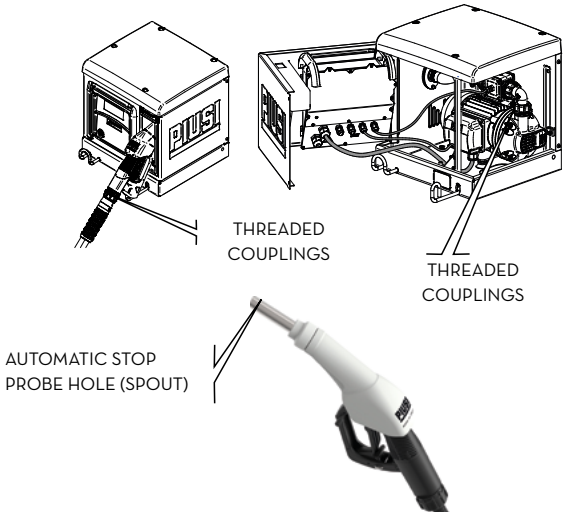

maintenance procedures must be performed regularly

Safety Warnings
The dispensing system has been designed and built to require minimal maintenance.
Before performing any type of maintenance, the dispensing system must be disconnected from all power sources.
The use of personal protective equipment (PPE) is mandatory during maintenance
In any case, follow these minimum recommendations to ensure the system operates properly

Authorized personnel for maintenance work
Maintenance work should only be carried out by trained personnel Any tampering can lead to a decline in performance and danger to people and/or property, as well as the voiding of the warranty.

ONCE A WEEK:
- Check that the pipe joints are not loose to prevent leaks

ONCE A MONTH:

- Inspect the pump housing and keep it free of any debris
- Check that the power supply cables are in good condition

CAUTION: Maintenance on electrical components may only be performed by qualified electrical or electronic technicians.

Before performing any maintenance, make sure to disconnect the device from the power supply to turn it off and isolate it from the electrical grid.

If the device is sold without a power cord, ensure that the grounding circuit is checked periodically in accordance with applicable regulations.

PUMP AND PIPING MAINTENANCE

Check and keep the pump, piping, and other internal components of the station (filter and pulser) clean. Check that flanged or threaded connections do not leak and that the flexible hoses are intact and undamaged.

19.2 MAINTENANCE OF THE DISPENSING HOSE AND NOZZLE

Keep the dispensing hose and nozzle clean, checking in particular that:

1. The hose is intact and has not been damaged by passing vehicles
2. The threaded connections are tight and free of leaks
3. The swivel fittings (at the station outlet and on the nozzle) rotate freely and do not leak
4. The hole in the automatic shut-off probe at the end of the nozzle hose (spout) is not blocked

WARNING: For detailed instructions on the use and maintenance of the SB325_X nozzle, refer to the specific manual.

WARNING

FILTER REPLACEMENT: It is recommended to replace the filter annually. For replacement instructions, refer to the specific manual.

19.3 FLUSHING

Flushing helps remove any product crystallization on parts that may come into contact with air:

- Nozzle spout
- Bottom valve filter

CAUTION: When performing cleaning operations, be sure to wear all required personal protective equipment (PPE)

CAUTION: Use only demineralized water to clean the spray nozzle and suction valve filter.

Disposal

Dispose of the liquid resulting from the flushing in accordance with the regulations in effect in the country of use.

19.4 LEAVING THE SYSTEM UNUSED FOR EXTENDED PERIODS

Procedures to Follow

If the system is not expected to be used for at least 15 days, it must be drained to prevent the product from crystallizing inside the system, followed by a flushing cycle.

19.5 EXTRAORDINARY MAINTENANCE

CAUTION: Maintenance of electrical components may only be performed by qualified electrical or electronic technicians.

Before performing any maintenance, be sure to disconnect the device from the power supply to turn it off and isolate it from the electrical grid.

If the device is sold without a power cord, ensure that the grounding circuit is checked periodically in accordance with applicable regulations.

1. Firmware update via smartphone; see the dedicated section in the app manual
2. Fuse inspection: To access the fuses, you must open the unit and gain access to parts that are live during normal use; to work safely, disconnect the unit from the main power supply

19.6 FUSE CHECK AND REPLACEMENT

To check and replace the fuses on the circuit boards:

1. Disconnect the unit from the power supply;
2. Open the SELF SERVICE B.SMART door to access the control unit
3. Unscrew the screws on the metal back panel to access the electronic circuit board compartment

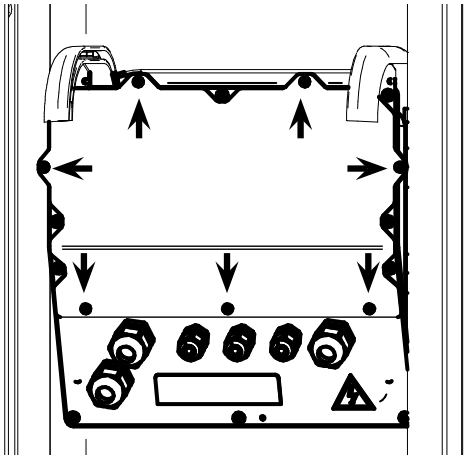

4. Check the status of the 2 indicated fuses and replace them if necessary

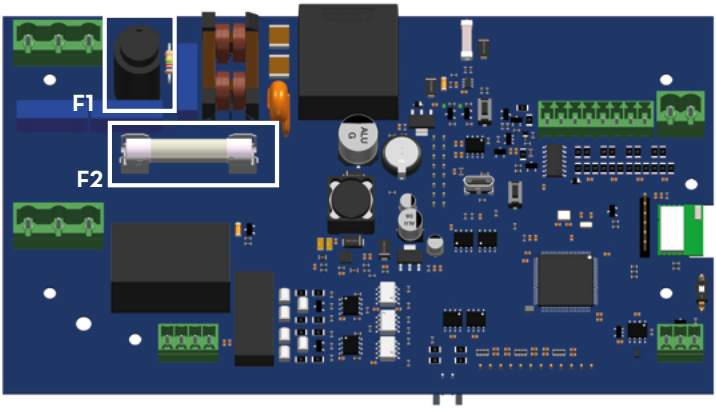

F1 Power supply fuse at the AC power input: 800 mA T (time-delay)
F2 Motor fuse, 20 A T (time-delay)

5. Tighten the screws on the metal back panel to close the electronic circuit board compartment and restore power

20 TROUBLESHOOTING

20.1 MECHANICAL AND HYDRAULIC PROBLEMS

PROBLEM	POSSIBLE CAUSES	POSSIBLE SOLUTIONS
THE MOTOR DOES NOT TURN	Lack of power supply	Reset the external ground-fault circuit interrupter. Check the electrical connections Set the ON/OFF switch on the pump to the ON position.
	The microswitch on the nozzle control lever is faulty.	Replace the microswitch
	Motor problems	If the rotor is jammed, disassemble it, check for damage or obstructions, and reassemble it. Contact customer service.
THE MOTOR DOES NOT RESTART WHEN THE NOZZLE IS CLOSED	Supply voltage too low	Check that the supply voltage is not less than 5% of the standard voltage.
LOW OR NO FLOW RATE	Excessive suction depression	Lower the Self Service relative to the tank level or increase the pipe diameter.
	High pressure losses in the circuit	Use shorter or larger diameter pipes
	Suction pipe resting on the bottom of the tank	Lift the suction pipe
	Low level of the suction tank	Fill tank
	Air entering the suction pipe or the pump	Check the tightness of the connections and the fluid level in the tank
	Low motor rotation speed	Check the voltage at the motor: adjust the voltage and/or use cables with a larger cross-section
	Non-return valve blocked	CONTACT CUSTOMER SERVICE
	Tank filter clogged	Clean the filter
	Pump filter clogged	Clean the filter
	CLOGGED AD-BLUE FILTER	Replace the filter
	Fluid leak	Check that the connections are tight and inspect the condition of the rubber hoses
	Suction hose restriction	Use a hose suitable for working under vacuum
	Pump or Engine Freeze	DO NOT start a frozen pump to avoid damage to the motor or pump. Thaw the pump and check for damage
	Leak in the pump discharge hose	Check that the hose connections are secure; inspect the hose for possible damage
	Failure to prime	Fill the suction line with demineralized water

INSUFFICIENT ACCURACY OF THE LITER METER	Presence of air in suction	Check connections for tightness
	Insufficient calibration	Calibrate the flow meter
THE SPRAY NOZZLE TRIGGERS TOO OFTEN	Automatic shut-off probe hole is clogged	Clean the automatic shut-off probe hole of dirt and/or obstructions
HIGH PUMP NOISE LEVEL	Presence of cavitation	Reduce vacuum at suction
	Irregular bypass operation	Dispense fuel until the air in the bypass system is purged
	Air present in the liquid to be pumped	Check connections at suction
LEAKS FROM THE PUMP BODY	Pump damage	Contact Customer Service

20.2 ELECTRICAL/ELECTRONIC CONNECTIONS

PROBLEM	POSSIBLE CAUSES	POSSIBLE SOLUTIONS
SELF-SERVICE B.SMART Does not turn on	No power due to: • Incorrect connections • Upstream circuit breaker in the OFF position • Power supply fuse blown	Check connections Set the isolator switch to the ON position Check the fuse
A driver with an electronic key is not recognized	The electronic key has not been paired by the MANAGER	The system's MANAGER pairs the key with the driver
	The electronic key is damaged and is no longer recognized by the system	Replace the electronic key; additionally, the facility's MANAGER must delete the old key's code and associate the new key with the driver via the WebAPP
The motor does not start	It has not been properly connected to the designated terminals	Check the connections, or (if present) make sure the motor switch is in the ON position
It does not count during fuel dispensing	The pulser that emits the counting signals is not properly connected	Check the connections
	The pulser that emits the counting signals is NOT compatible with the electronics	The electronics are designed to receive an input signal of the "clean contact" "dry contact" or "Open Collector" type. If the input signal is of an incompatible voltage, not only will the system malfunction, but the electronic board is also likely to be damaged
	Damaged Pulser board	Replace the Pulser board
The count is not accurate	The system is NOT calibrated	Calibrate the system according to the procedure

The count is not accurate even after calibration, or it is accurate only at low flow rates	The signal from the pulser is outside the range accepted by the electronics	The signal received from the pulser must have a frequency . of 300 Hz and a duty cycle between 10% and 90%. If these ranges are exceeded, the system will not process the received data correctly. You must bring the system back within the correct ranges, if necessary by inserting other electronic (consult Technical Support for these specific options)

20.3 ISSUES RELATED TO THE SMARTPHONE APP

PROBLEM	POSSIBLE CAUSES	POSSIBLE SOLUTIONS
The app indicates that the driver is not authorized	The manager has not authorized the driver at the fueling station	The MANAGER authorizes the driver at the fueling station via the WebAPP in the section dedicated to drivers
The smartphone refueling transaction is not recorded in the cloud	The refueling was performed using a smartphone with data connection disabled or in an area with poor 2G/3G/4G coverage	The refueling transaction will appear in the cloud as soon as the app is opened in an area with 2G/3G/4G coverage. In the meantime, it will be stored in the smartphone's memory and also in the fuel dispenser's memory
The app cannot detect the control unit, but Bluetooth is active	The Bluetooth module on the smartphone is not compatible with the dispenser's Bluetooth module	The dispenser's Bluetooth module is compatible with all smartphones equipped with Bluetooth version 4.0 or later (smartphones from 2011 onward)
	The dispenser is currently in use by another driver	The fuel pump will be visible on the smartphone only after the driver currently using it has finished their transaction

21 FAQ

1	**If a driver changes smartphones, is it necessary to create a new account for that driver, or can they continue using the one they already had?** **CAUTION**	If a driver changes smartphones, they must notify the facility manager, who will then delete or reset the smartphone-driver pairing in the WebApp (procedure described in the WebApp manual, chapter "DRIVER DETAILS"). The driver can then log in using the app installed on the new smartphone. **Once the manager has removed the smartphone-driver pairing, the driver must log in using a different smartphone than the previous one, because access with their credentials is blocked on the old device. To log in using the old smartphone, the driver must first log in with a new smartphone, then have their account reset, and finally log in with the original smartphone**
2	**What should a driver do if they lose their smartphone?**	If a driver loses their smartphone, they must notify the facility manager, who will immediately remove the smartphone-driver pairing. The procedure to follow is the same as described in Question 1.
3	**What should you do when the app reports that the smartphone is not recognized?**	 This error typically occurs when a driver has switched smartphones but kept the same phone number, and the facility manager has not reset the account. In this case, the driver must contact the manager and report the error displayed by the app. The manager will remove the smartphone-driver pairing to allow the driver to log in from the new smartphone. The procedure the manager must follow is the same as that described in Question 1 (see also the WebApp manual, chapter "DRIVER DETAILS")
4	**When are refueling transactions made via iButton or via a smartphone without an internet connection uploaded to the cloud?**	There are four scenarios in which fuel transactions are uploaded to the cloud: • Every time the app is opened, provided the data connection is active • The app is open in the background and the data connection is active • Data synchronization by the manager by pressing the SYNCHRONIZE button • Whenever a driver connects to the control unit and the smartphone's internet connection is active As you can see from the list, fuel dispensing transactions can be uploaded to the cloud even if the smartphone is not connected to the control unit.

5 What should you do if you can't dispense fuel using iButton authentication?

There are a few possible scenarios:

- Fuel dispensing log is full
- Empty tank
- iButton not associated with any driver

In detail:

Fuel dispensing memory full and tank empty

The red LED to the right of the control unit's display is on. This may indicate memory issues (dispensing memory full) or an empty tank. To clear the dispensing memory, perform a synchronization with the cloud. If the problem persists, reset the control unit

iButton not associated with any driver

When the iButton is placed on the reader, the display does not light up

6 What happens if a driver changes their phone number but keeps the same smartphone?

If a driver changes their phone number, they must notify their manager, who will update it in the driver's profile in the WebApp (see also the WebApp manual, chapter "DRIVER DETAILS").

In the app, the number updates automatically the first time you connect to the cloud. From that point on, that cell phone number will be the one you use to log in to the app.
Additionally, if you port your cell phone number between different mobile carriers, you'll likely have a temporary number for a few days, and you'll regain your original number as soon as the porting process is complete. In this case, during the transition period, there is no need to provide the facility manager with the temporary number; you can continue to use your original phone number.

22 DEMOLITION AND DISPOSAL

Background	In case of demolition of the system, the parts of which it is composed should be entrusted to companies specialized in industrial waste disposal and recycling, and in particular:
Disposal of packaging	The packaging consists of biodegradable cardboard that can be handed over to companies for normal pulp recovery.
Disposal of metal parts	Metal parts, whether painted or stainless steel, are normally recoverable by companies specializing in metal scrapping.
Disposal of electrical and electronic components	They must mandatorily be disposed of by companies specialized in the disposal of electronic components, in accordance with the guidance of Directive 2012/19/EU (see directive text below).
Environment-related information for customers residing in the European Union	The European Directive 2012/19/EU requires that equipment marked with this symbol on the product and/or packaging must not be disposed of together with unsorted municipal waste. The symbol indicates that this product should not be disposed of together with normal household waste. It is the owner's responsibility to dispose of both these products and other electrical and electronic equipment through the specific collection facilities designated by the government or local public agencies.
	Disposal of Waste Electronic and Electrical Equipment (WEEE) as household waste is strictly prohibited. This type of waste must be disposed of separately.
	Any hazardous substances in electrical and electronic equipment and/or improper use of such equipment can have possible serious consequences for the environment and human health.
	If such waste is disposed of improperly, the penalties provided for in current regulations may be applied
Disposal of additional parts	Additional constituent parts, such as hoses, rubber seals, plastic parts and wiring harnesses, are to be entrusted to companies specializing in industrial waste disposal.

23 EXPLODED VIEW

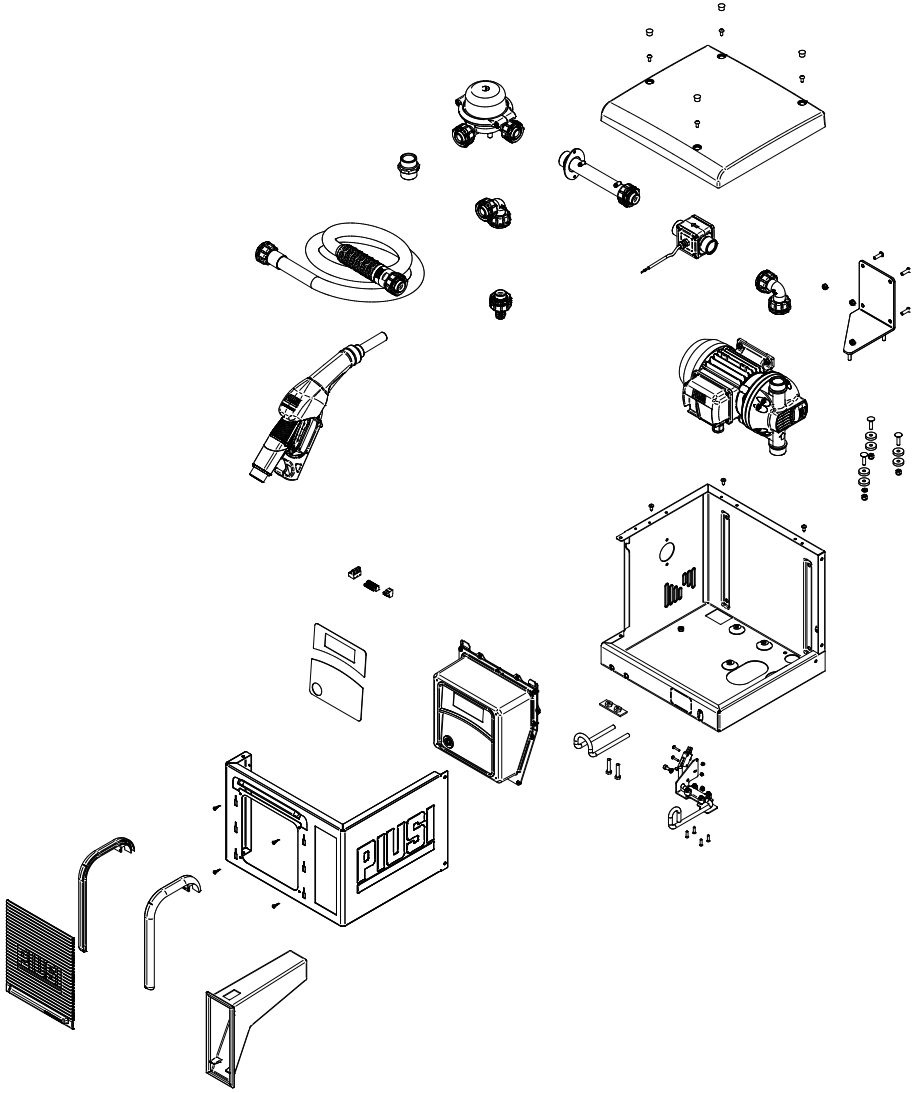

IT Scarica il manuale nella tua lingua!
EN Download the manual in your language!
CS Stáhnout příručku ve vašem jazyce!
DA Download manualen på dit sprog!
DE Laden Sie das Handbuch in Ihrer Sprache herunter!
ES ¡Descarga el manual en tu idioma!
FI Lataa käsikirja omalla kielelläsi!
FR Téléchargez le manuel dans votre langue!
NL Download de handleiding in uw taal!
PL Pobierz instrukcję w swoim języku!
PT Baixe o manual em seu idioma!
RU Загрузите руководство на вашем языке

https://www.piusi.com/support/search-manuals

piusi.com
PIUSI SpA • Suzzara MN Italy

BULLETIN M0895 EN_00

07.2026