document

technical sheet

product

IN LINE DIESEL

MADE IN ITALY

DIESEL



STANDARD



PULSE OUT

FEATURES	DISPLAY	PULSES DISPLAY	REED SWITCH
Measuring system:	Turbine	Turbine	Turbine
IP Protection:	IP55	IP55	IP55
Power supply:	2 x 1,5V AAA	12V DC - 10 mA (yellow +12V, brown 0V)	max 200 Vdc 0,5 A max 140 Vac 0,35 A
Pulse signal [imp/out]:	/	100	(**)
Cable [m]:	/	2, flame retardant	2, flame retardant
Partial [digits]:	4 + 2 decimal	4 + 2 decimal	/
Totalizer [digits]:	6	6	/
Unit of measure:	litre, gallons, pints, quarts, customized	/	/
Battery level indicator:	Yes	No	No
Min flow rate [l/min]:	10	10	10
Max flow rate [l/min]:	150	150	150
Max pressure [bar/psi]:	3,5/51	3,5/51	3,5/51
Precision [%]:	± 0,5	± 0,5	± 0,5
Repeatability [%]:	0,2	0,2	0,2
Display rotation:	Complete with click every 180°	/	/
Inlet/Outlet [BSP/G]:	1" F	1" F	1" F
Body material:	PA 66 (Black)	PA 66 (Black)	PA 66 (Black)
Turbine material:	POM-C	POM-C	POM-C
O-Ring material:	NBR	NBR	NBR
Other materials in contact with the fluid	Brass, Steel	Brass, Steel	Brass, Steel
Operating Min/Max Temperature [°C]:	-10 / +60	-10 / +60	-10 / +60
Allowed fluids:	Diesel	Diesel	Diesel
Forbidden fluids:	Gas, Alcool, Gasoline, Water		
Loudness at less 1 meter [dBA]:	< 70	< 70	< 70
Net weight [Kg]:	0,25	0,25	0,25
Single size packaging [mm]:	l 145 x b 135 x h 85	l 145 x b 135 x h 85	l 145 x b 135 x h 85
Gross weight [Kg]:	0,35	0,35	0,35

FUNCTIONS:

Resettable partial
Total non-resettable
Resettable totalizer period
Instantaneous flow rate display
Calibration
Showing latest 5 refuelling
Stock display
Low stock alarm

(**)Approximately 38 Imp /out

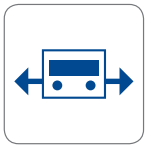

OUTLET POSITION



BRASS FITTINGS



DOUBLE REED

Adam Pumps S.p.A.
Soc. con Socio Unico
via della resistenza 46/48 - 41011 Campogalliano (MO) ITALIA
Tel +39 059 528128 - Fax +39 059 528437 | www.adampumps.com - info@adampumps.com

category

digital flowmeter

model

IN LINE battery - pulse out

MADE IN ITALY

	CODE		DESCRIPTION	Q.TY
	BATTERY	PULSE OUT		
1	MA031	MA031	STICKER WITH BUTTONS	1
2	81101010000	81101010000	BOLT M3	4
3	TF035X	TF035X	METER COVER	1
4	TF046	TF047	ELECTRONIC PCB	1
5	VT013	VT013	SCREWS M3	1
6	TF048	-	BATTERY AAA	2
7	OR018	OR018	O-RING	1
8	*	*	BODY IN LINE	1
9	TF039	TF039	TURBINE SHAFT	1
10	TF038	TF038	TURBINE HOLDER	2
11	TF037	TF037	TURBINE	1
12	TF040	TF040	MAGNET	2
13	VT009	VT009	SELF BLOCKING BOLT	1
14	VT012	VT012	SCREW M3 X 16	4
15	-	TF052	CABLE GLAND	1
16	-	CA012	CABLE 5 POLES	1

BODY IN LINE*	CODE
BODY IN LINE DIESEL (black)	TF036A
BODY IN LINE UREA (blue)	TF042
BODY IN LINE FOOD (white)	TF056



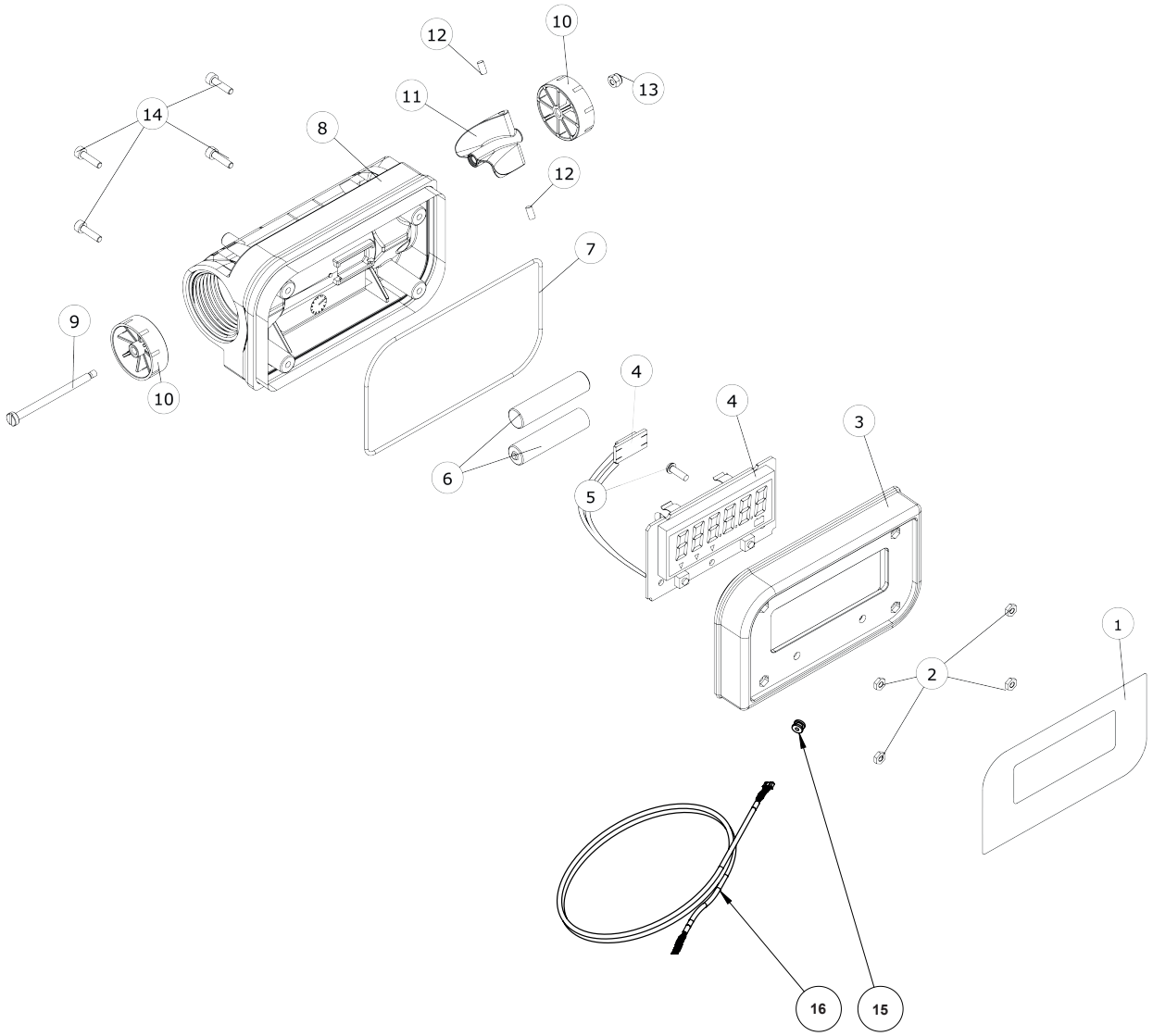

Adam Pumps S.p.A.
Soc. con Socio Unico
via della resistenza 46/48 - 41011 Campogalliano (MO) ITALIA
Tel +39 059 528128 - Fax +39 059 528437 | www.adampumps.com - info@adampumps.com

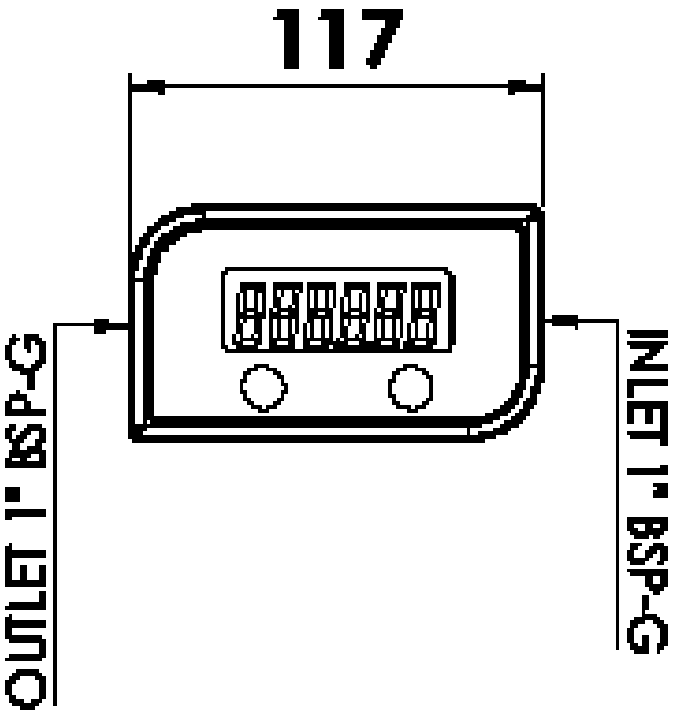

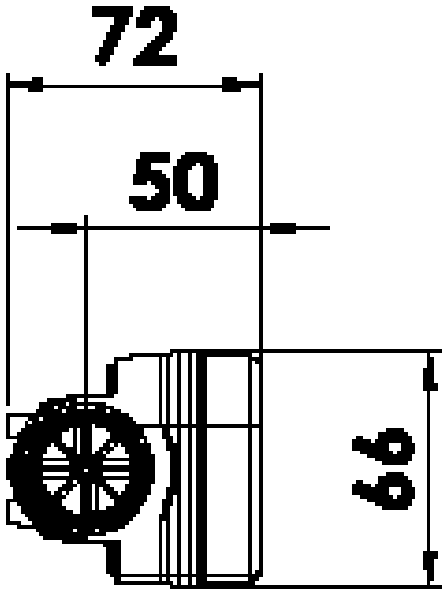



cover nera: gasolio
black cover: diesel

tutte le dimensioni espresse in mm - all dimensions are in mm

Adam Pumps S.p.A.
Soc. con Socio Unico
via della resistenza 46/48 - 41011 Campogalliano (MO) ITALIA
Tel +39 059 528128 - Fax +39 059 528437 | www.adampumps.com - info@adampumps.com